KELLER

SILO

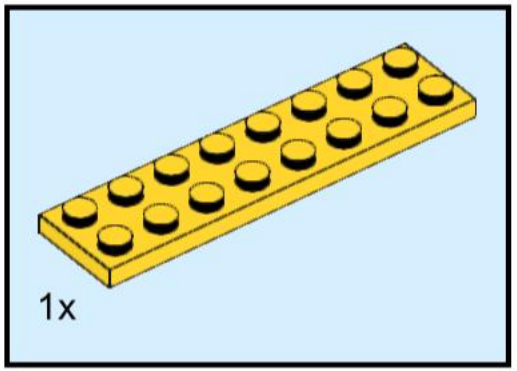

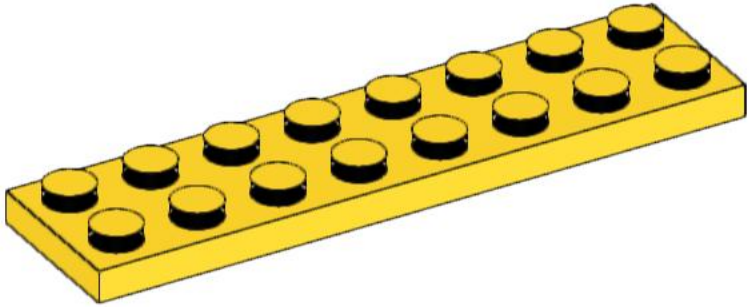

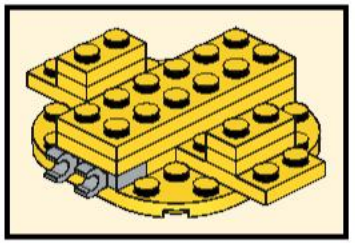

1

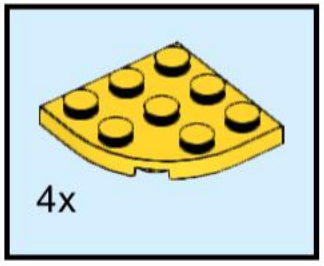

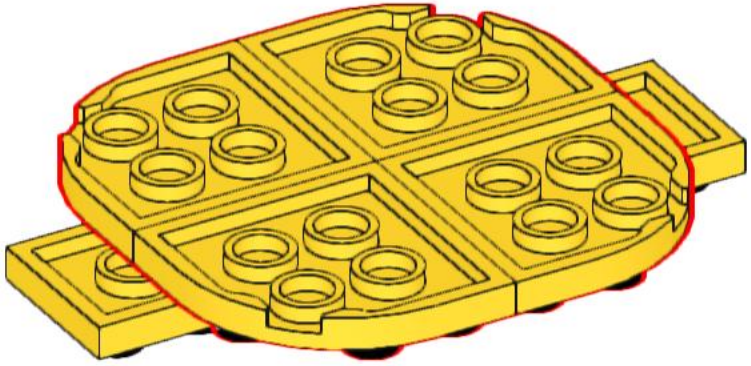

2

3

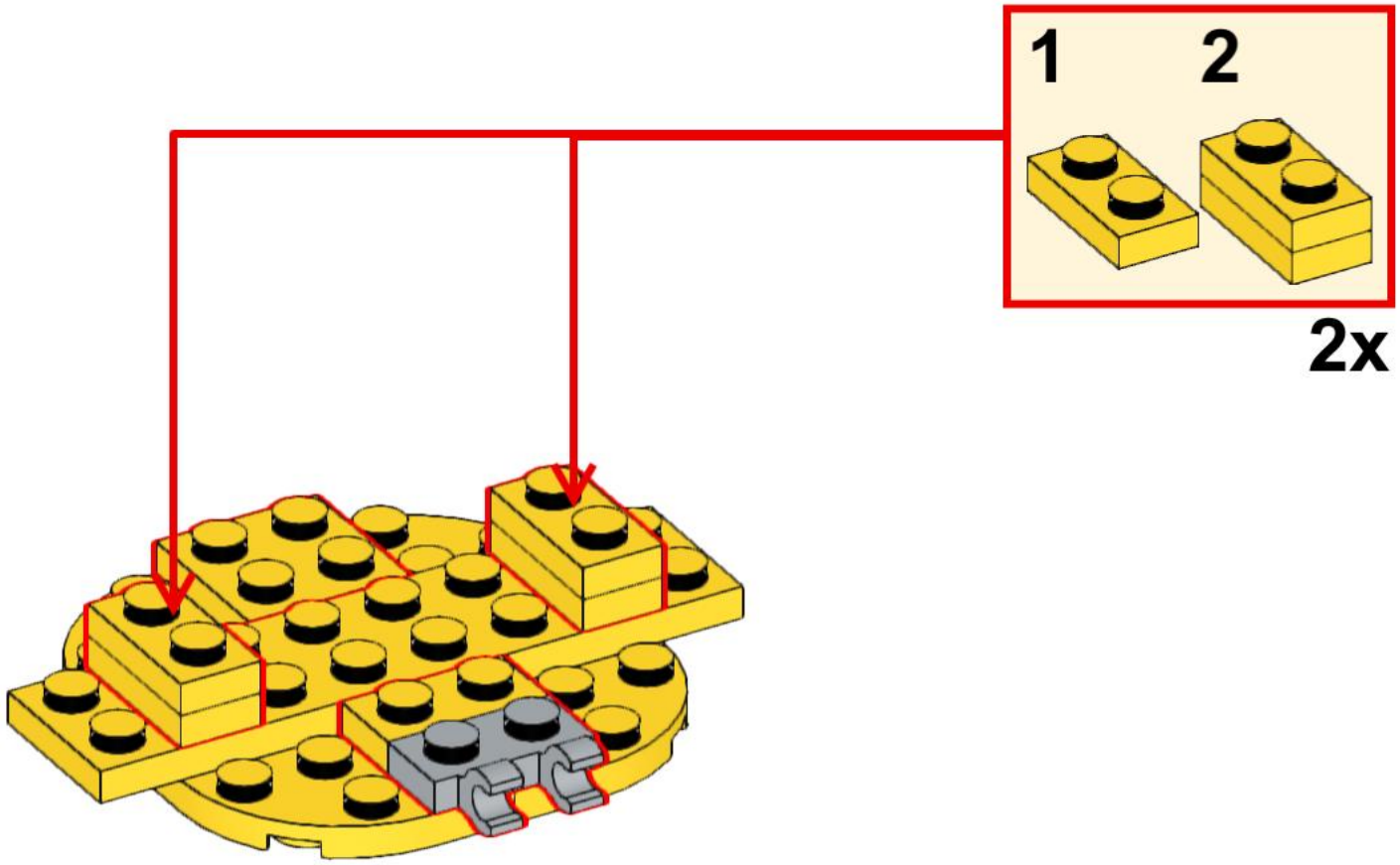

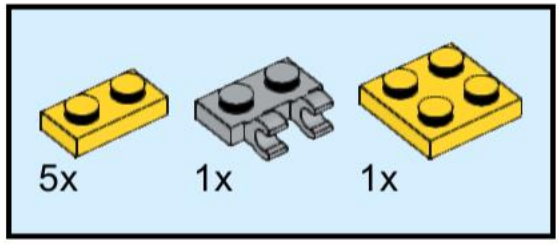

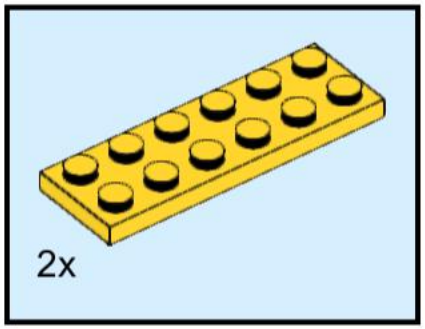
2x

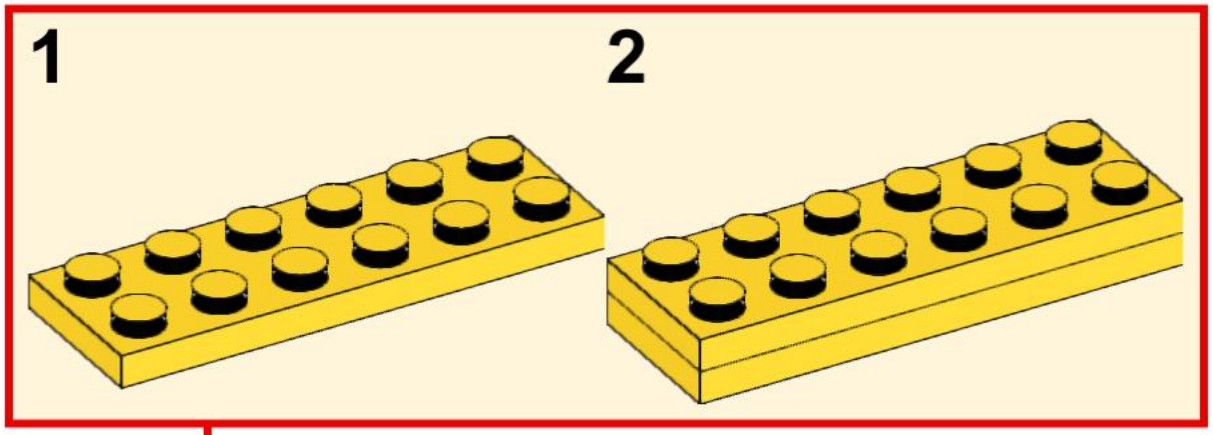
1
2

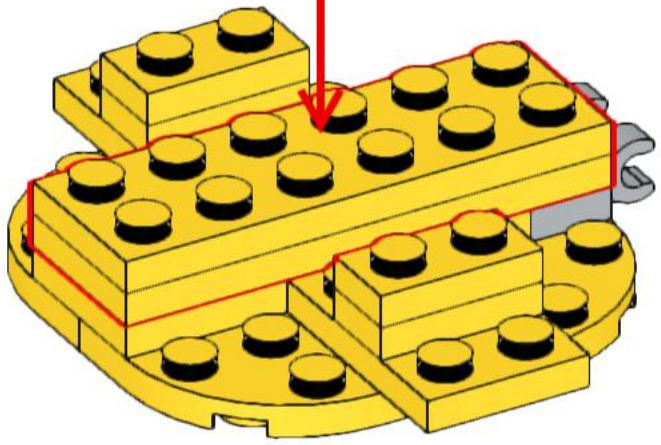

5

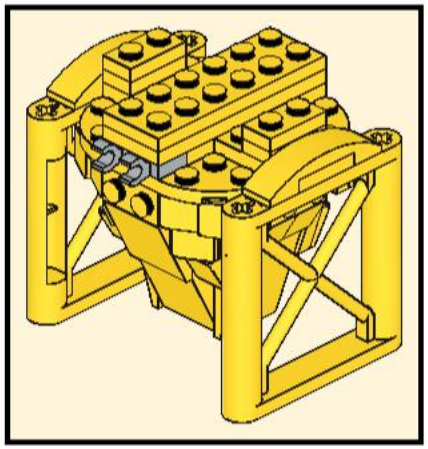

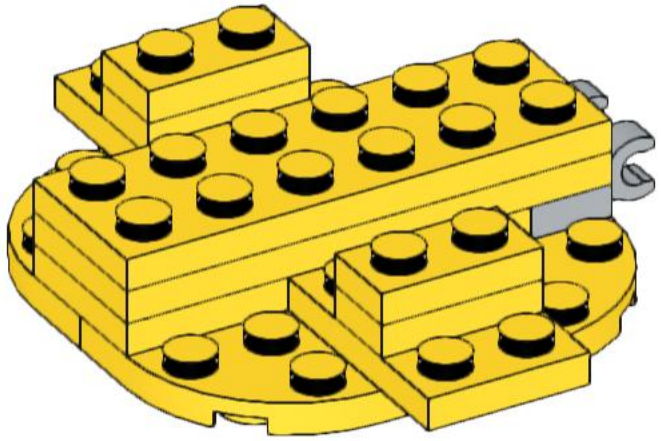

6

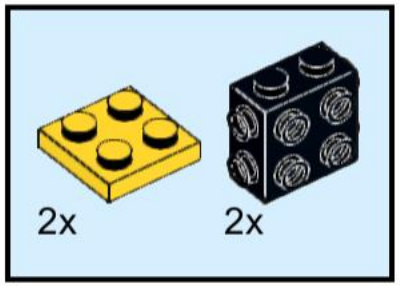

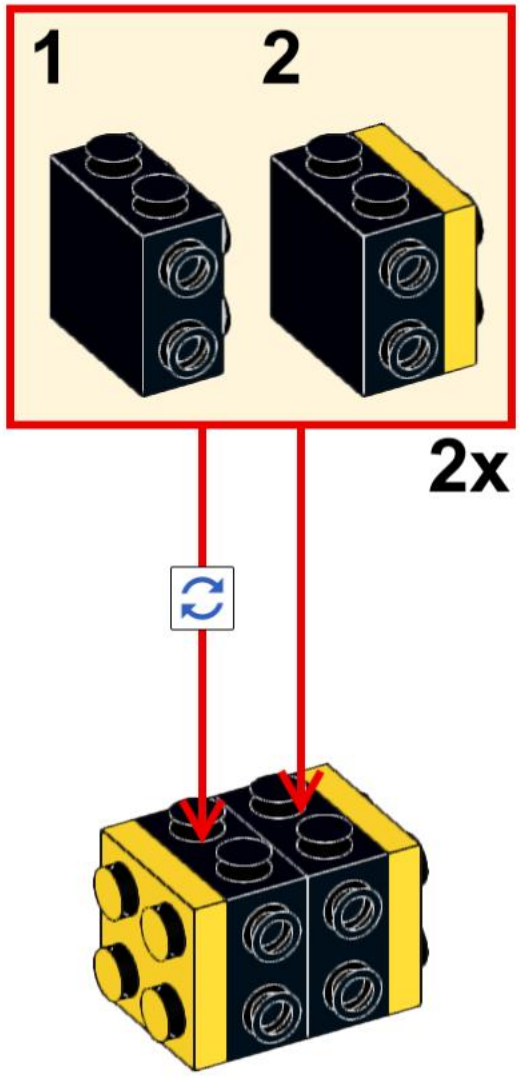

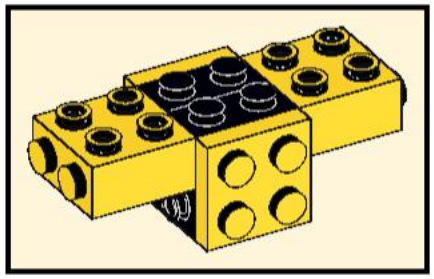

7

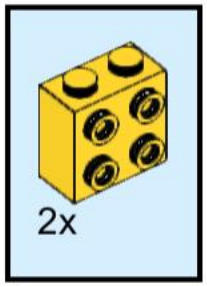

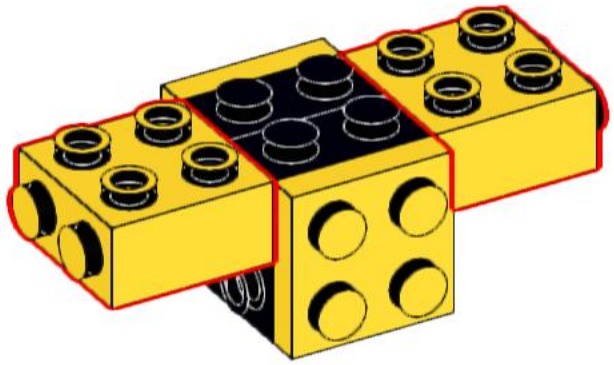

8

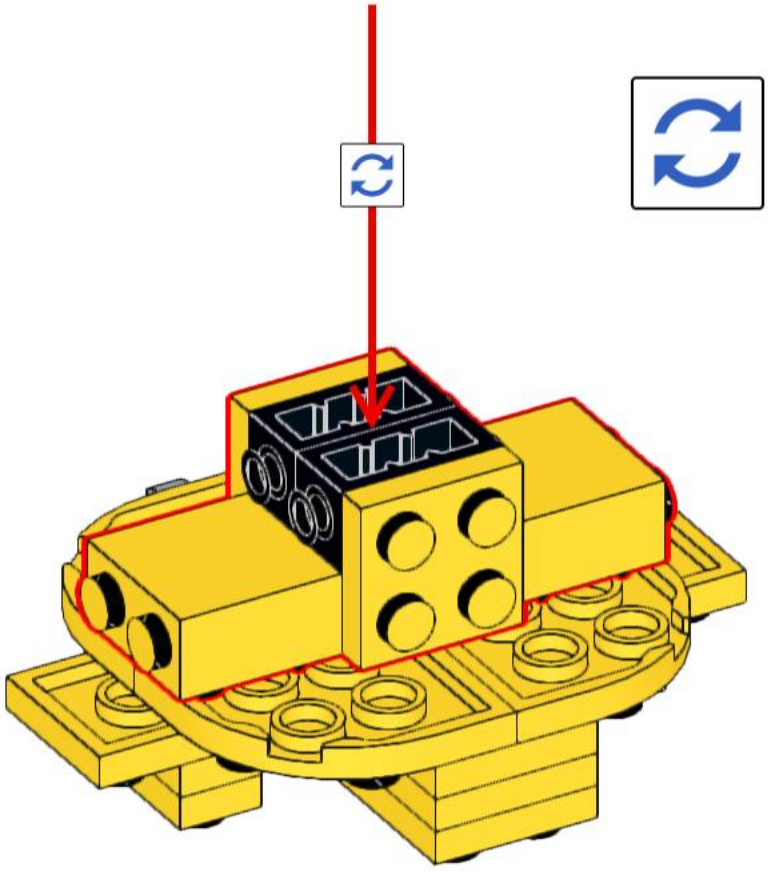

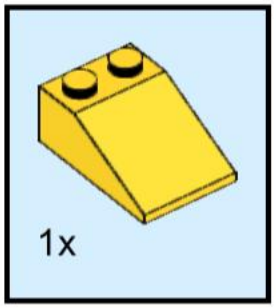

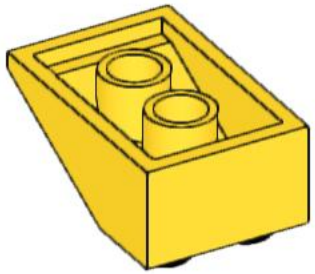

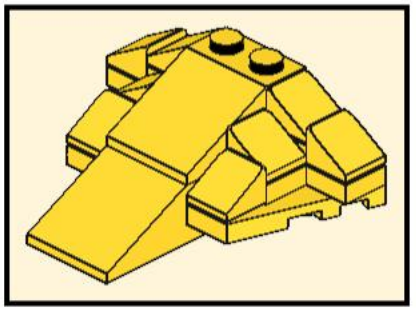

9

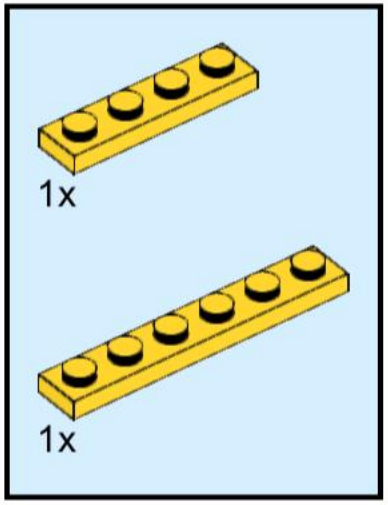

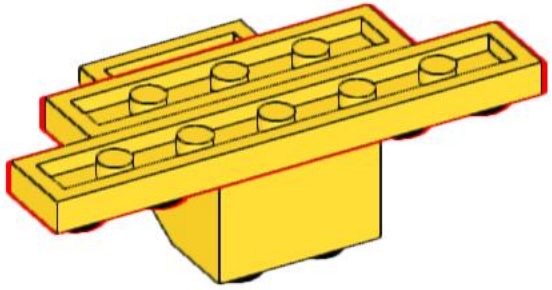

10

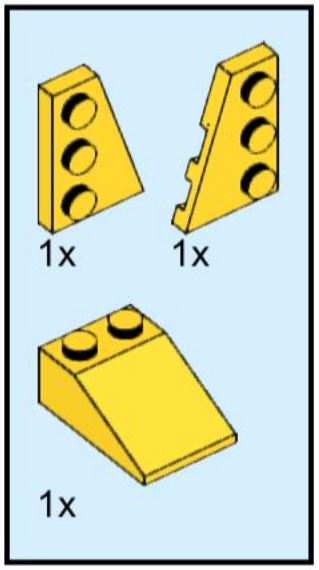

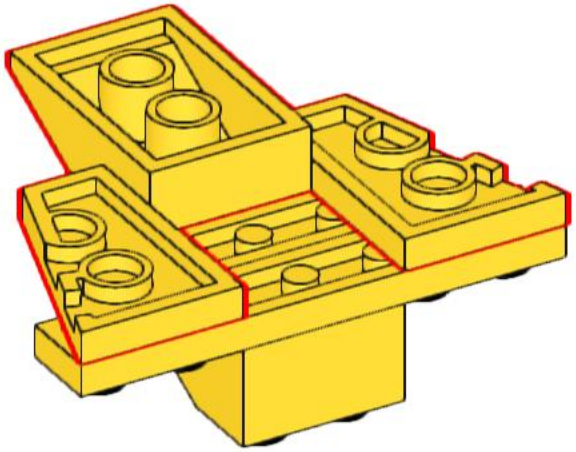

11

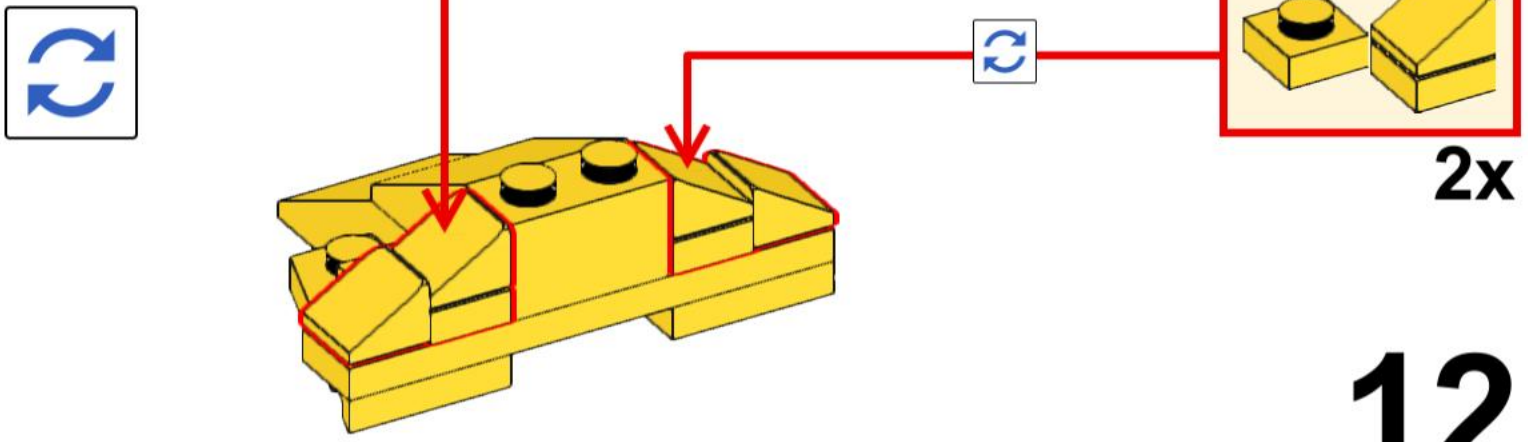

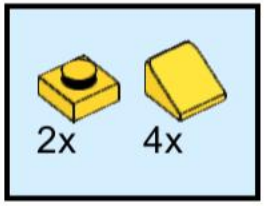

12

13

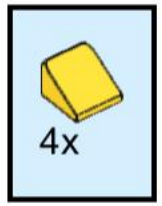

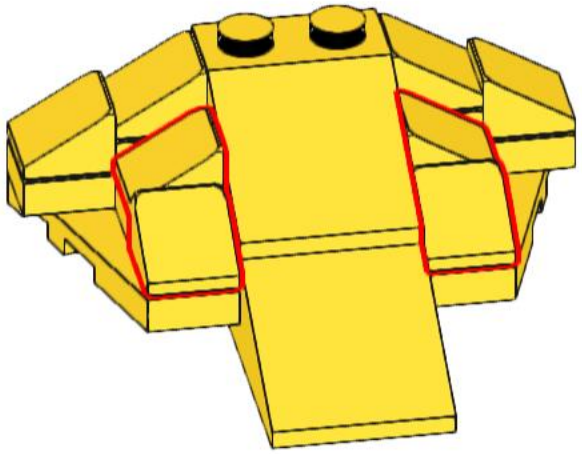

14

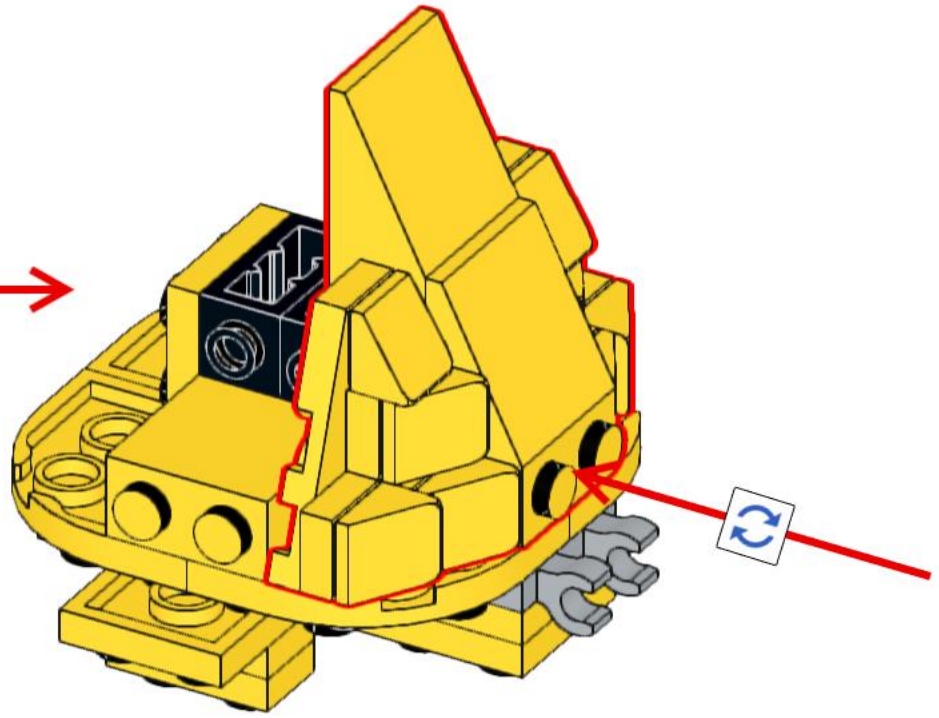

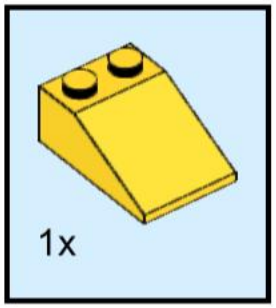

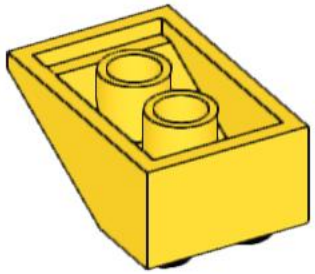

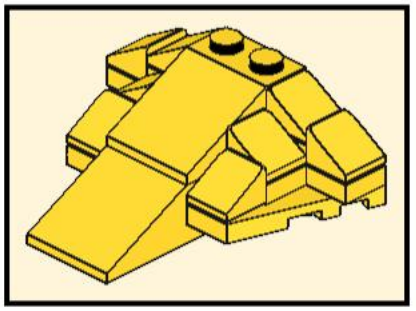

15

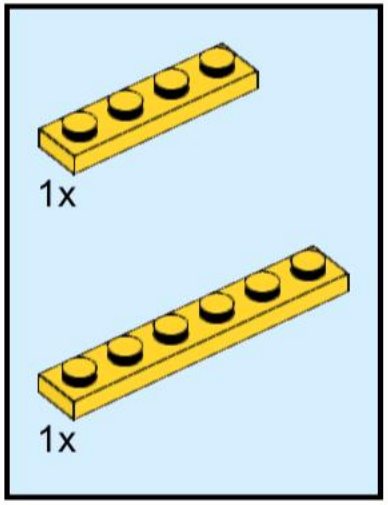

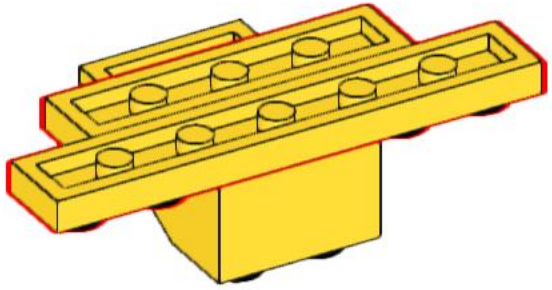

16

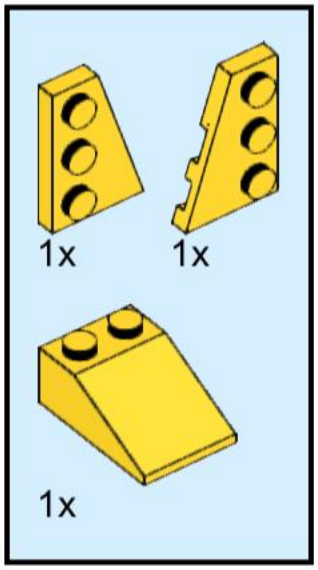

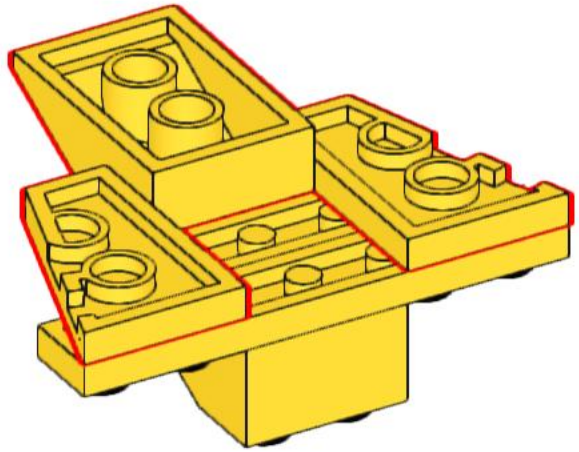

17

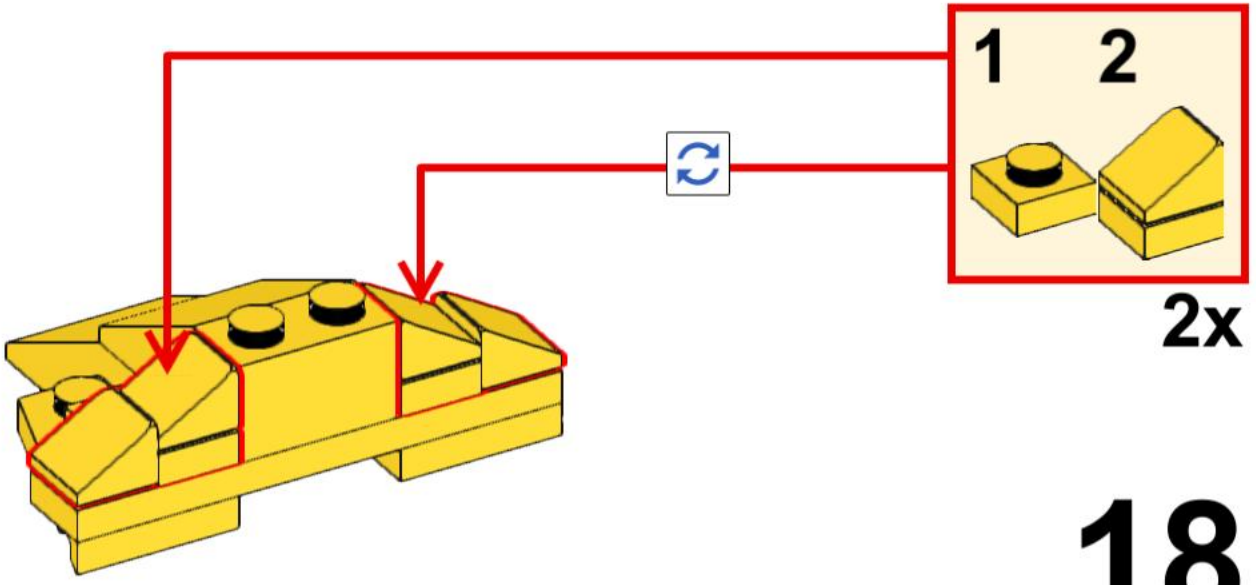

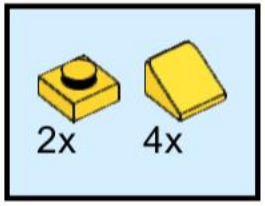

18

19

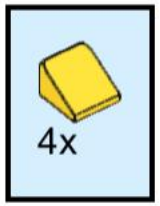

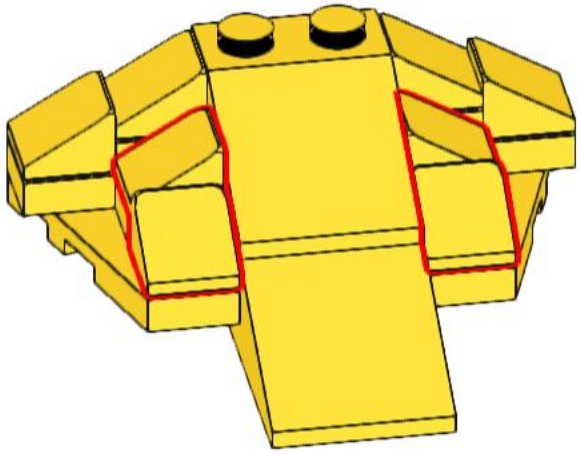

20

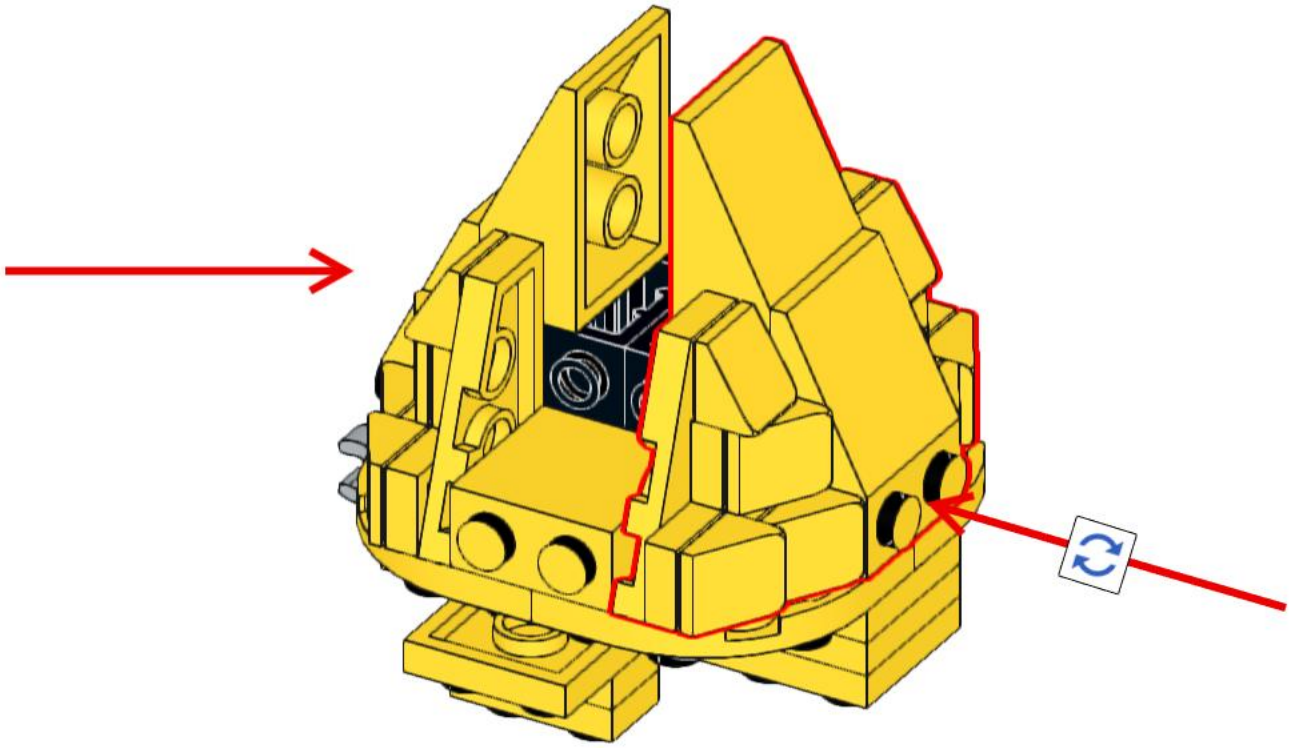

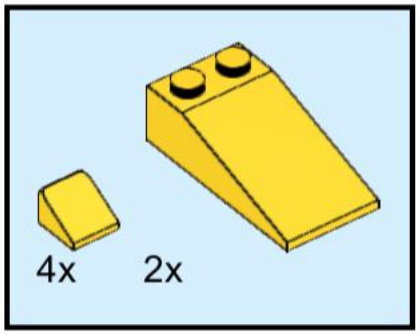
4x
2x

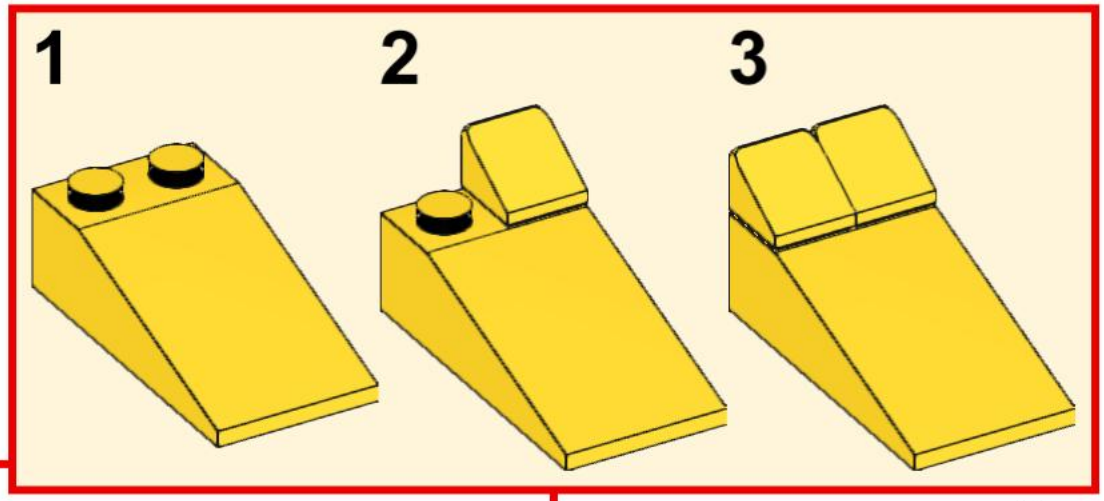
1
2
3
2x

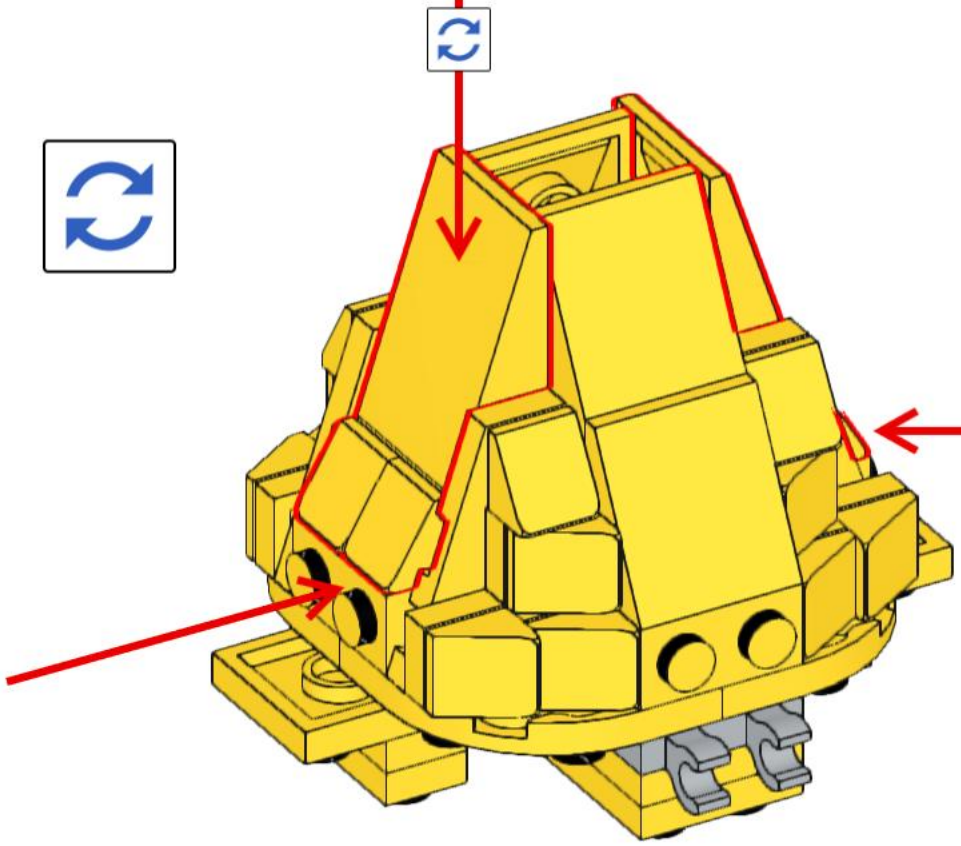

22

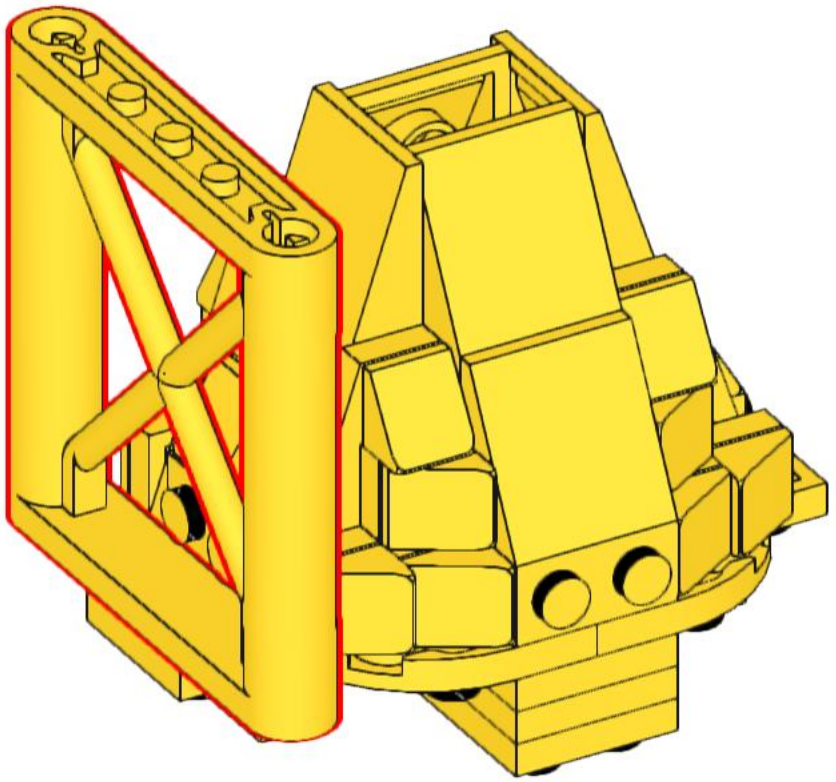

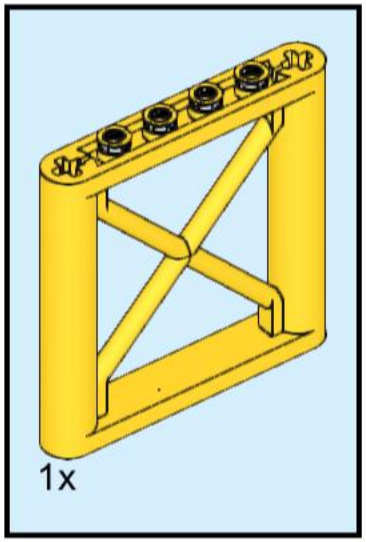

23

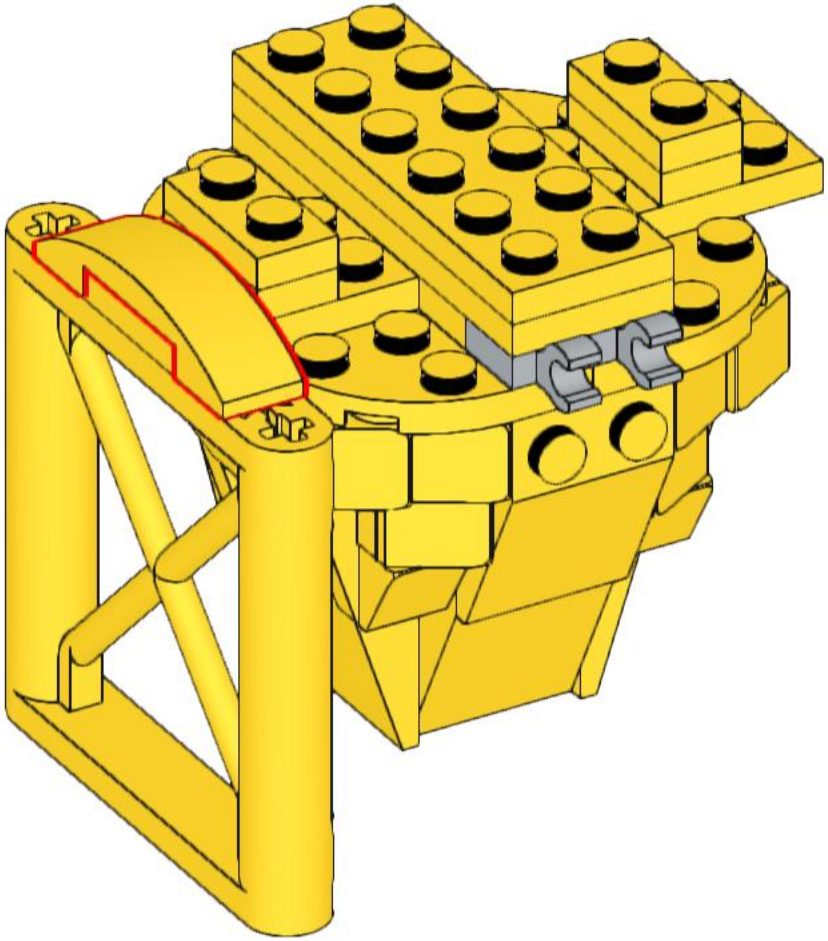

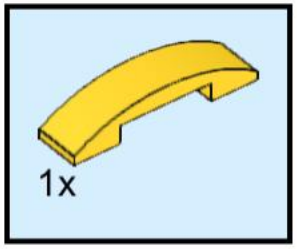

24

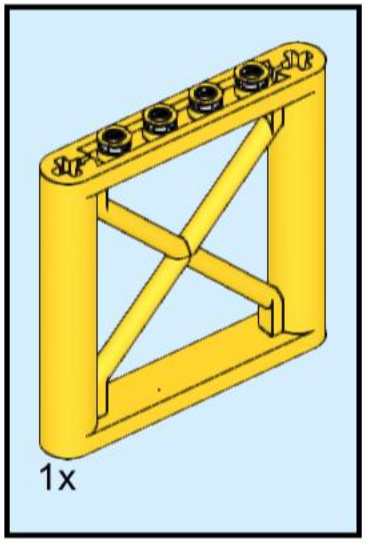

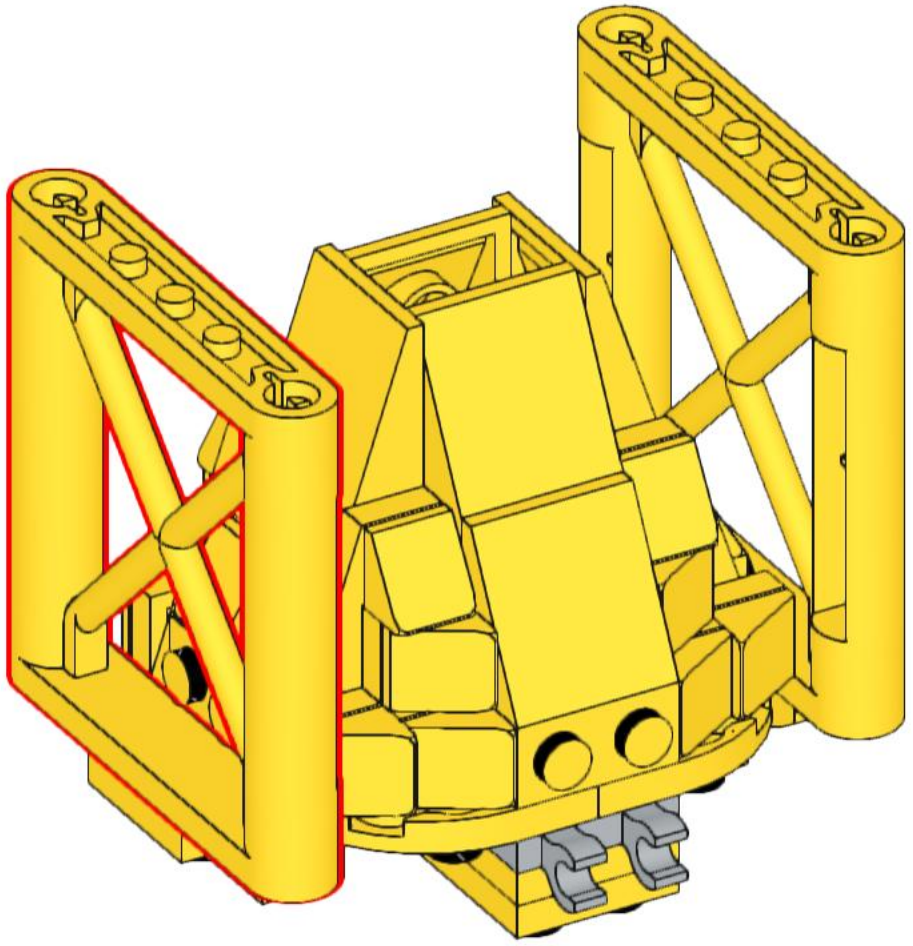

25

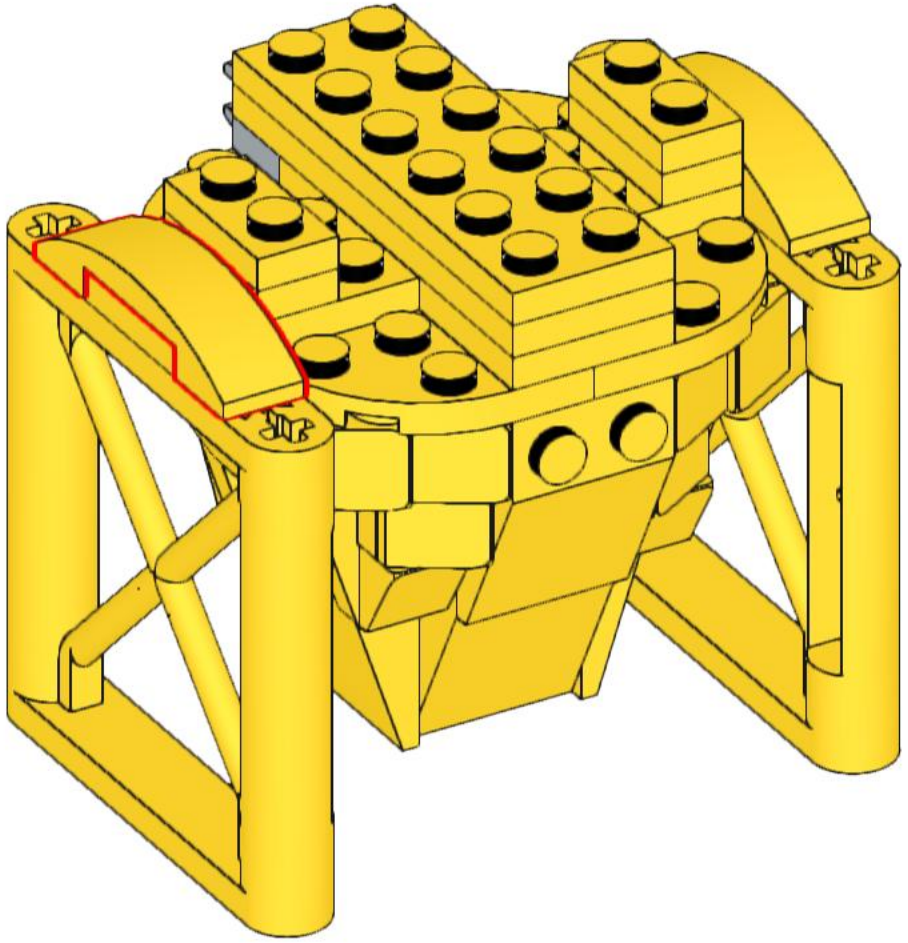

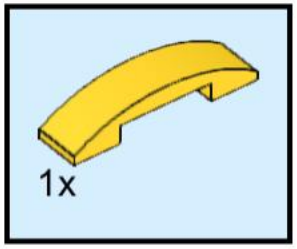

26

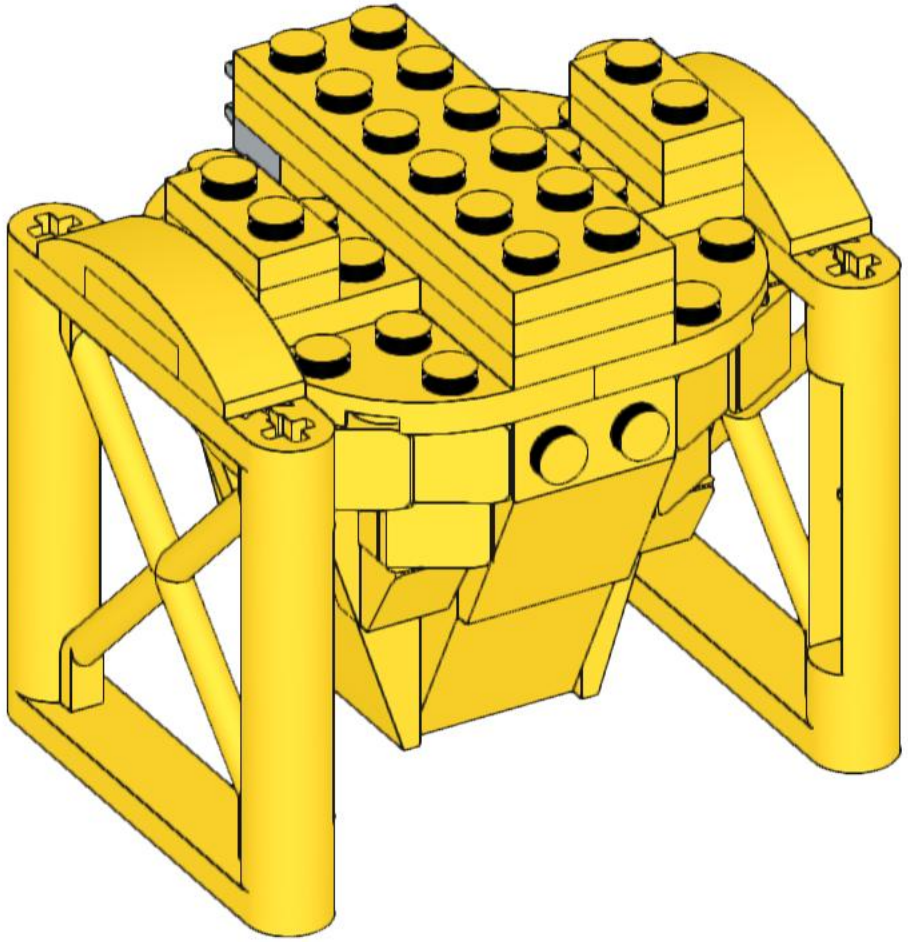

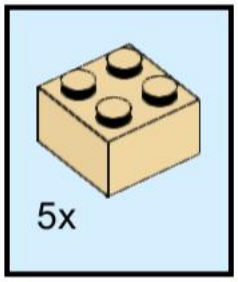
5x

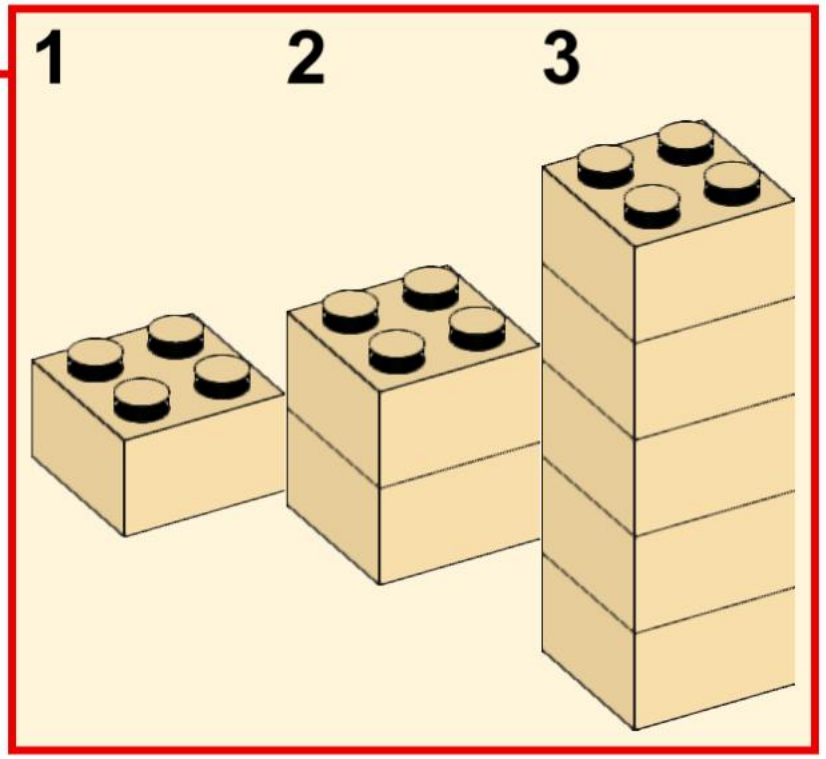
1
2
3

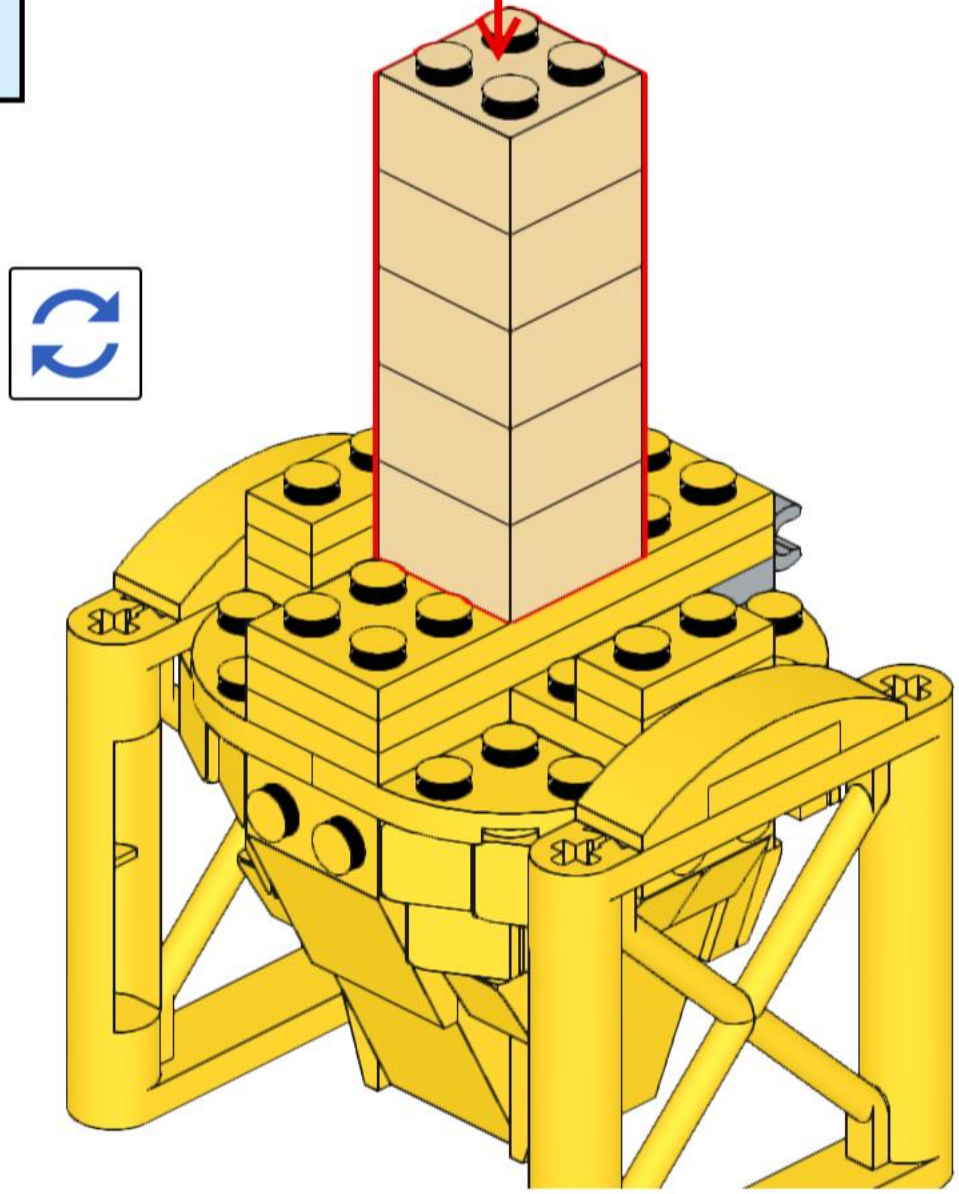

28

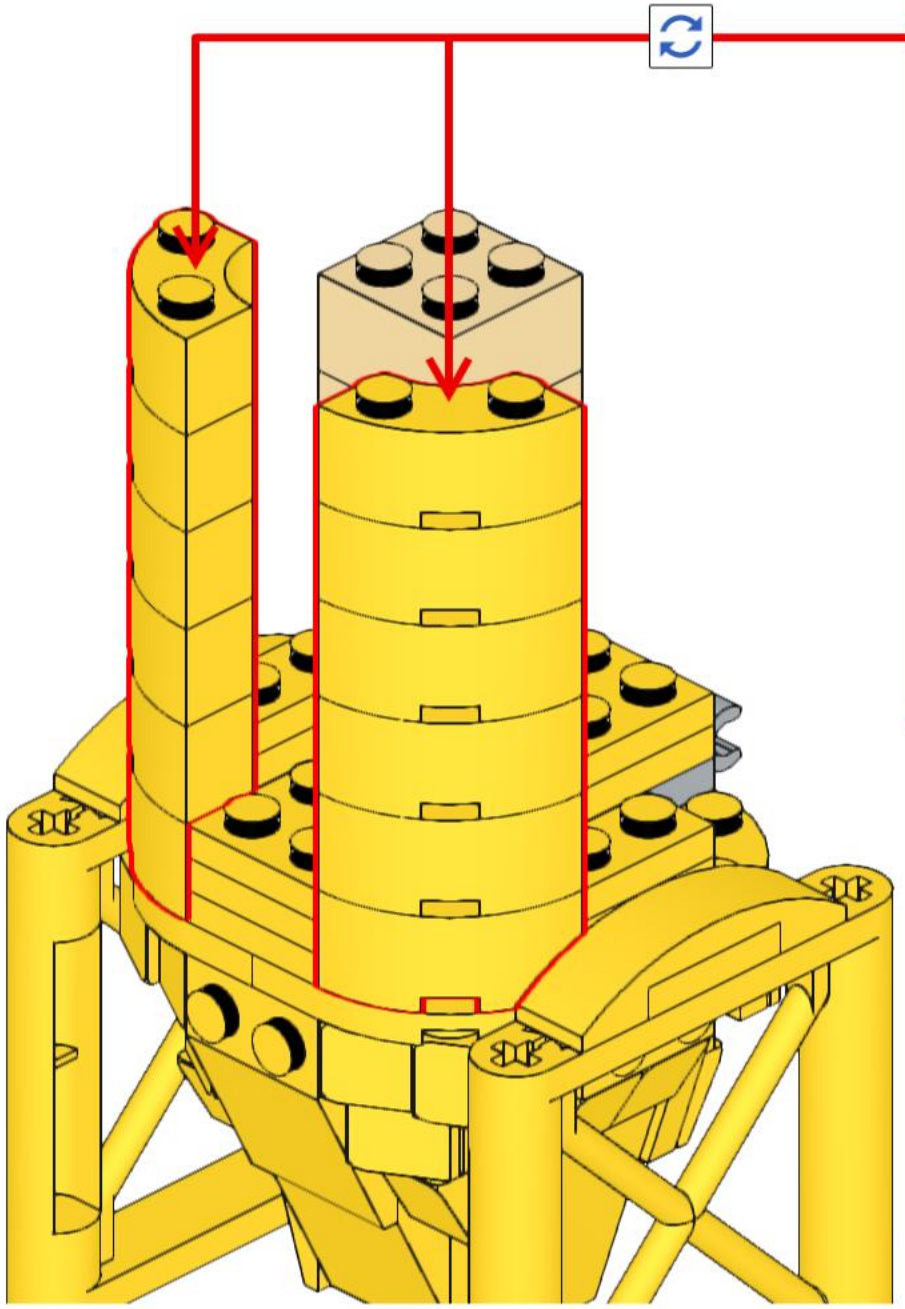

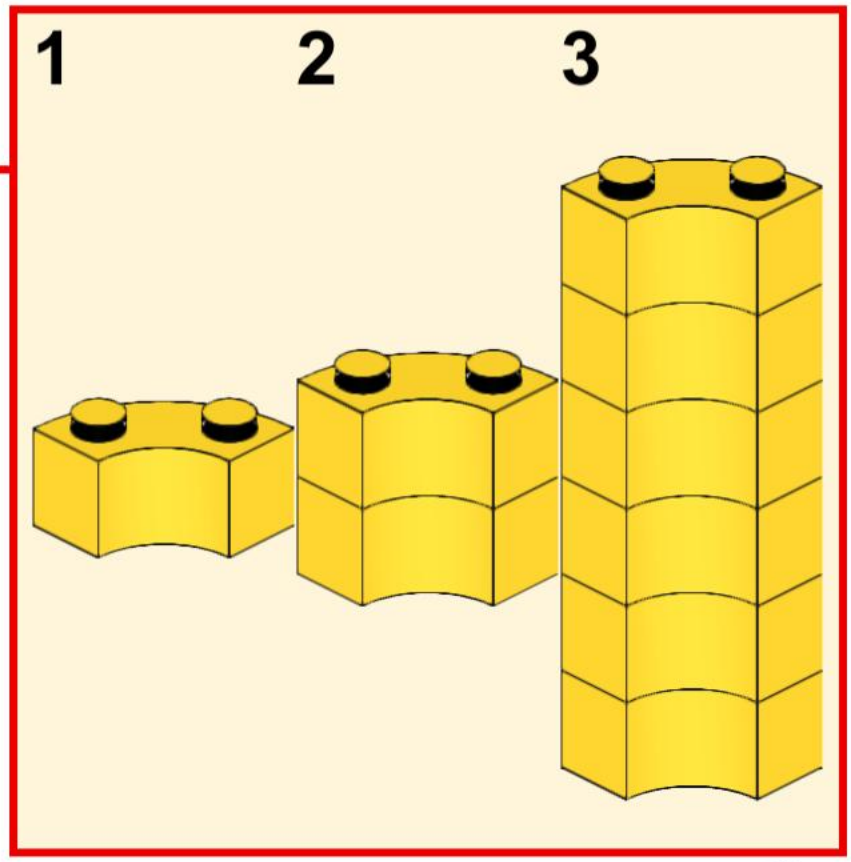

2x

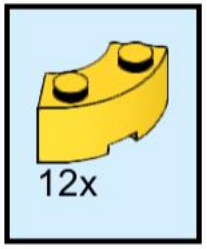

29

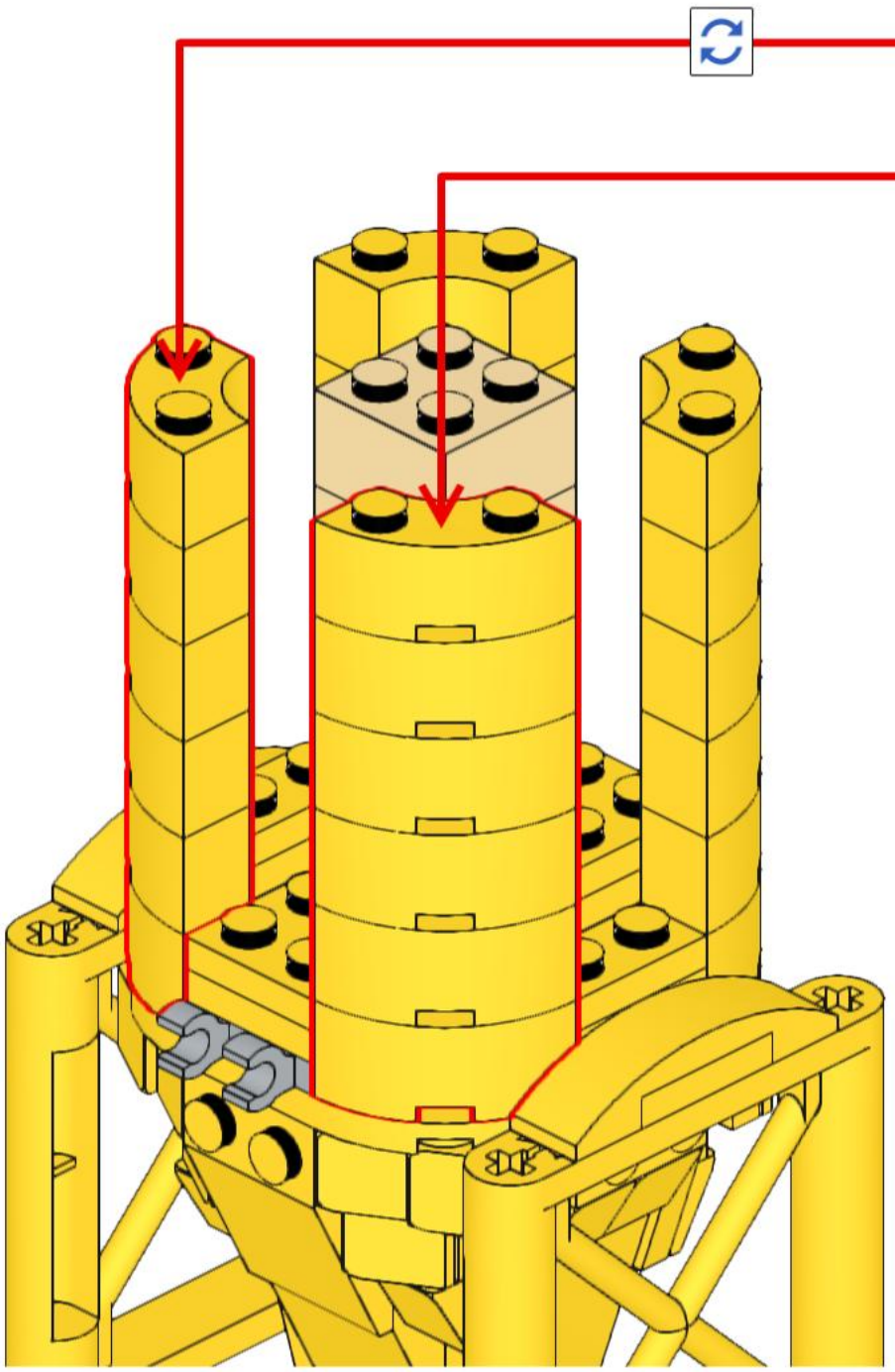

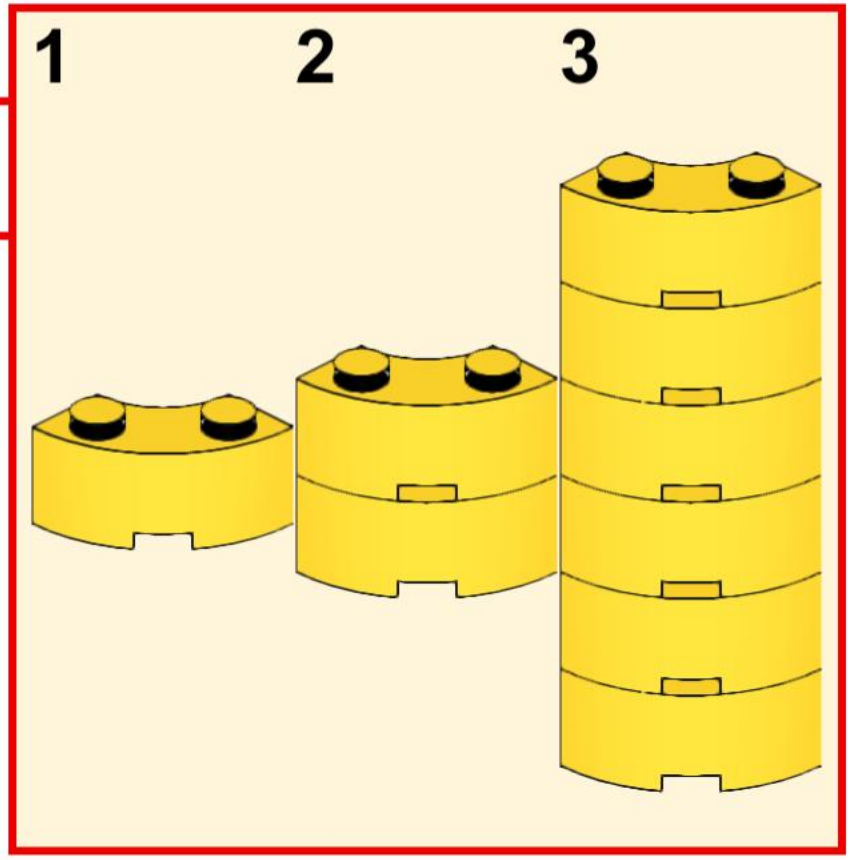

2x

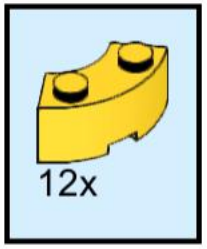

30

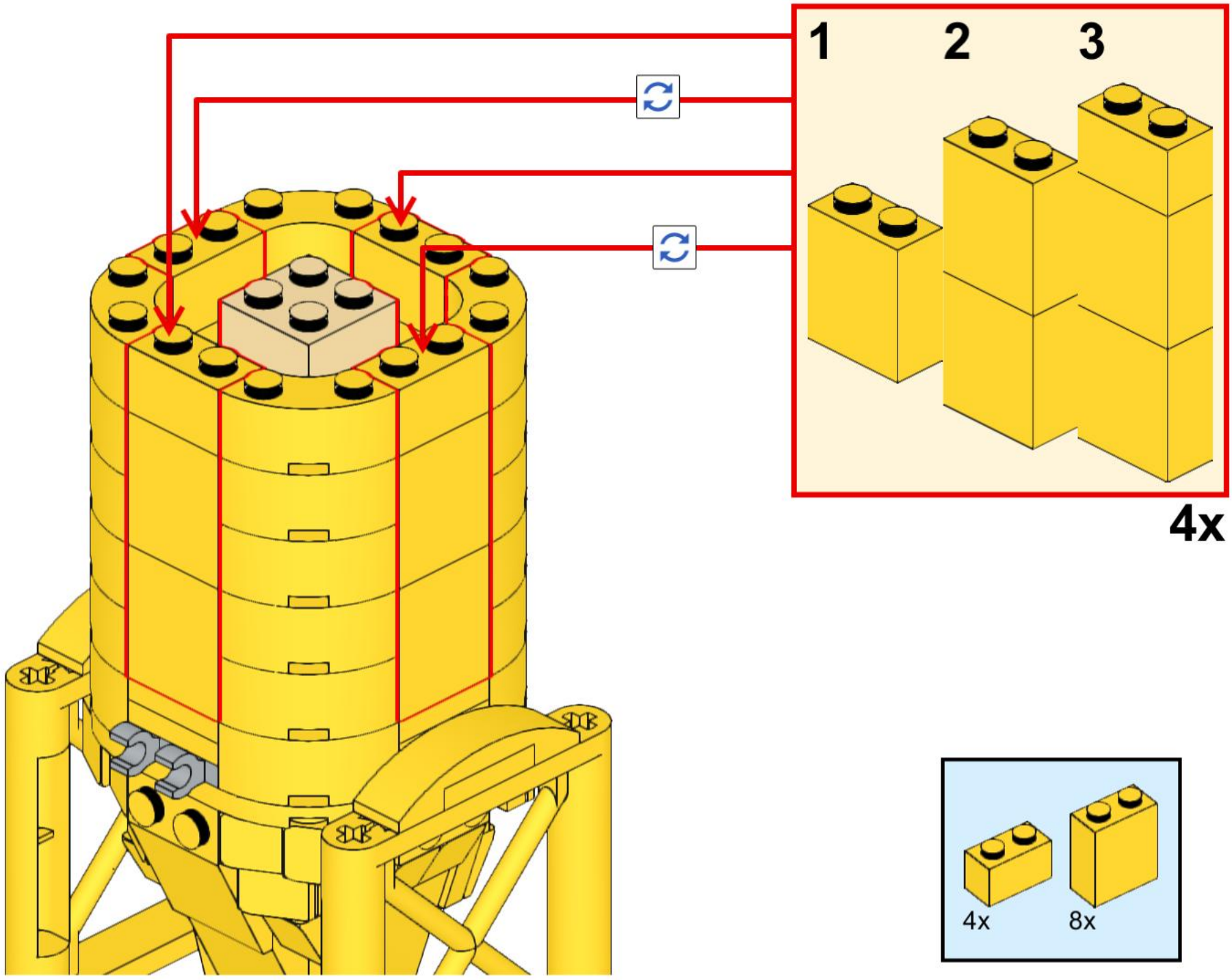

31

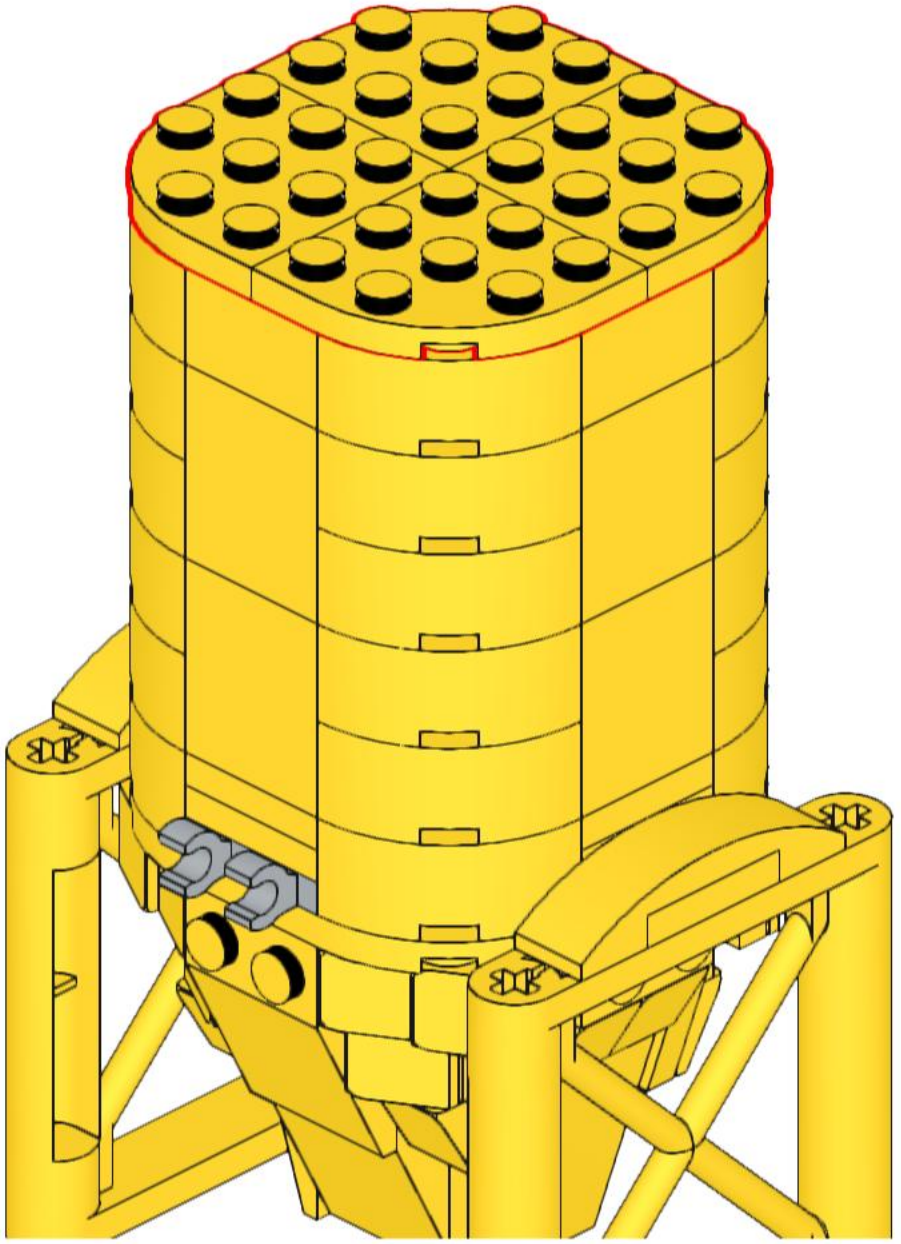

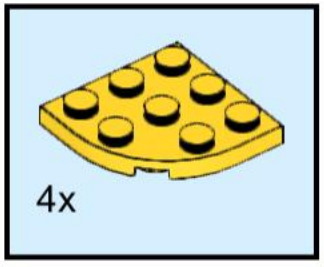

32

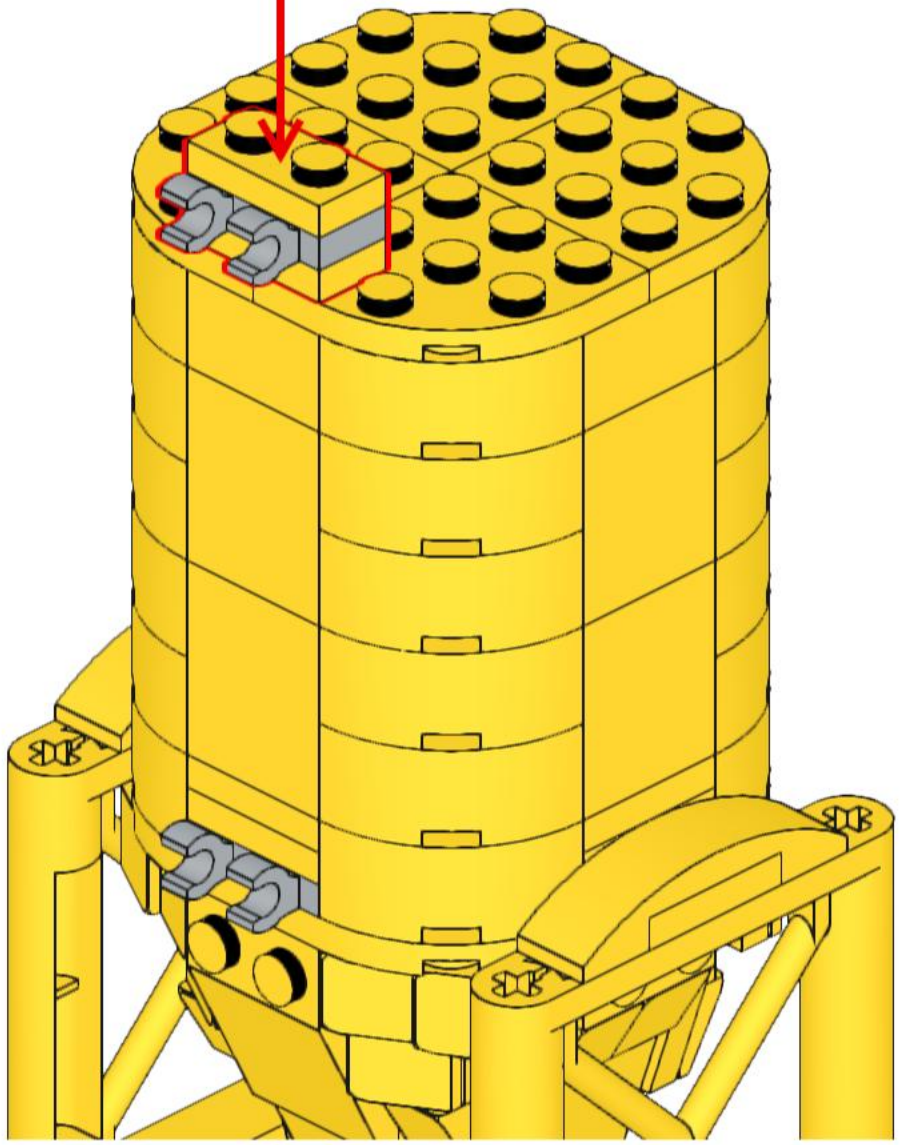

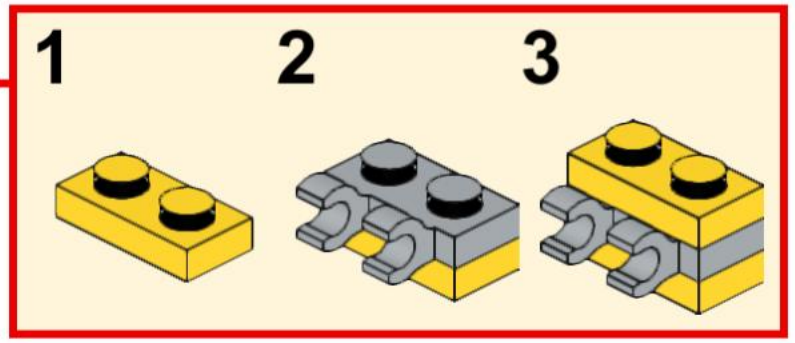

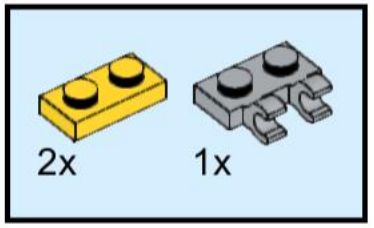

33

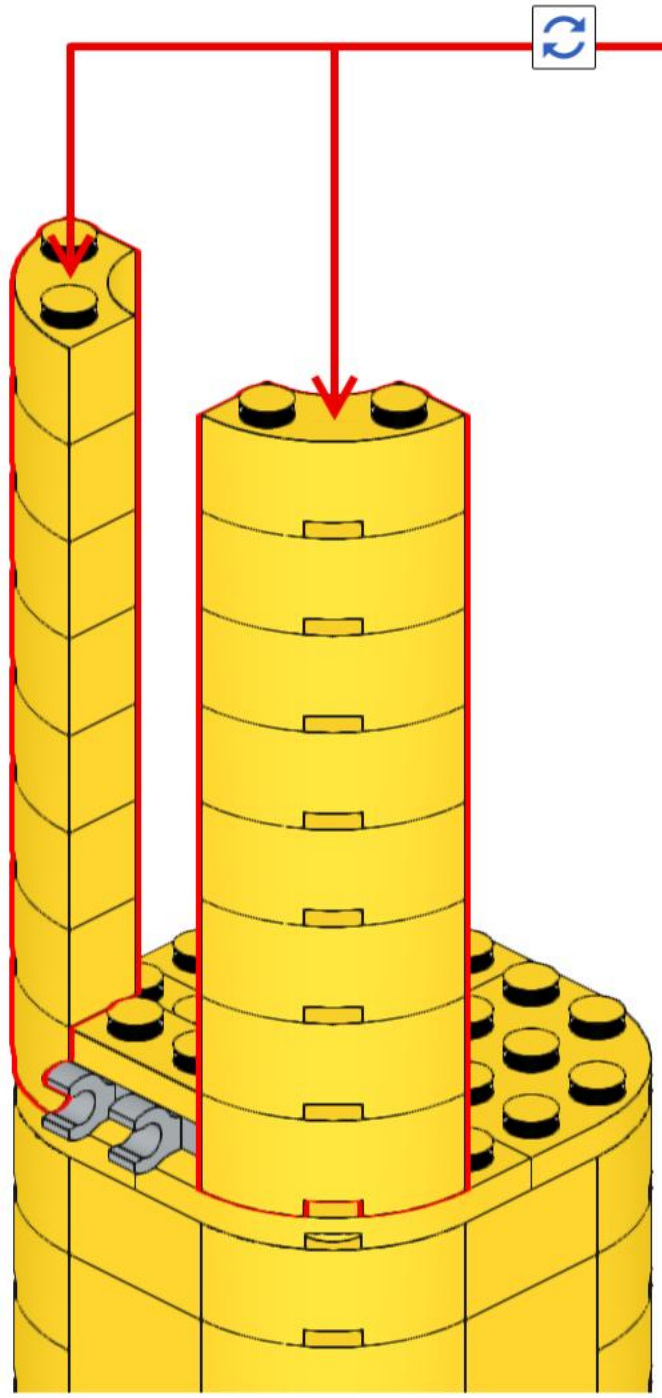

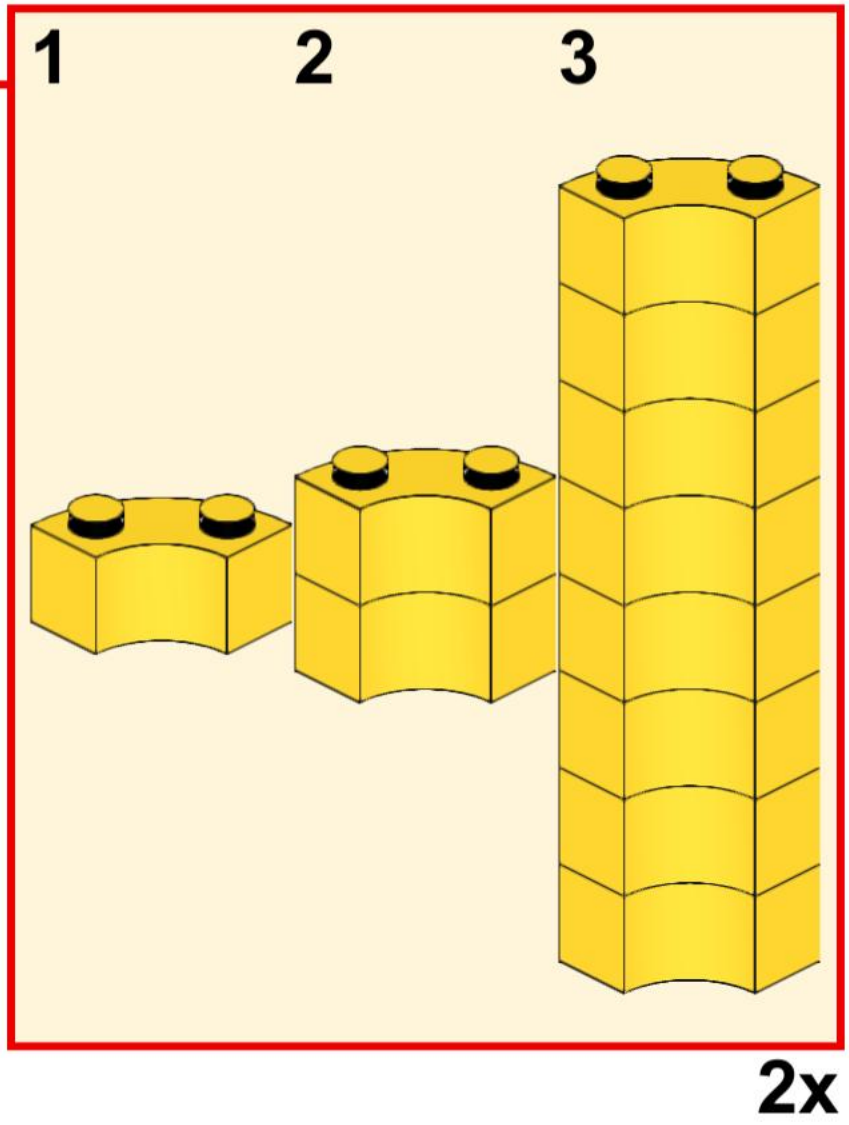

2x

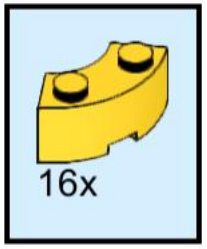

34

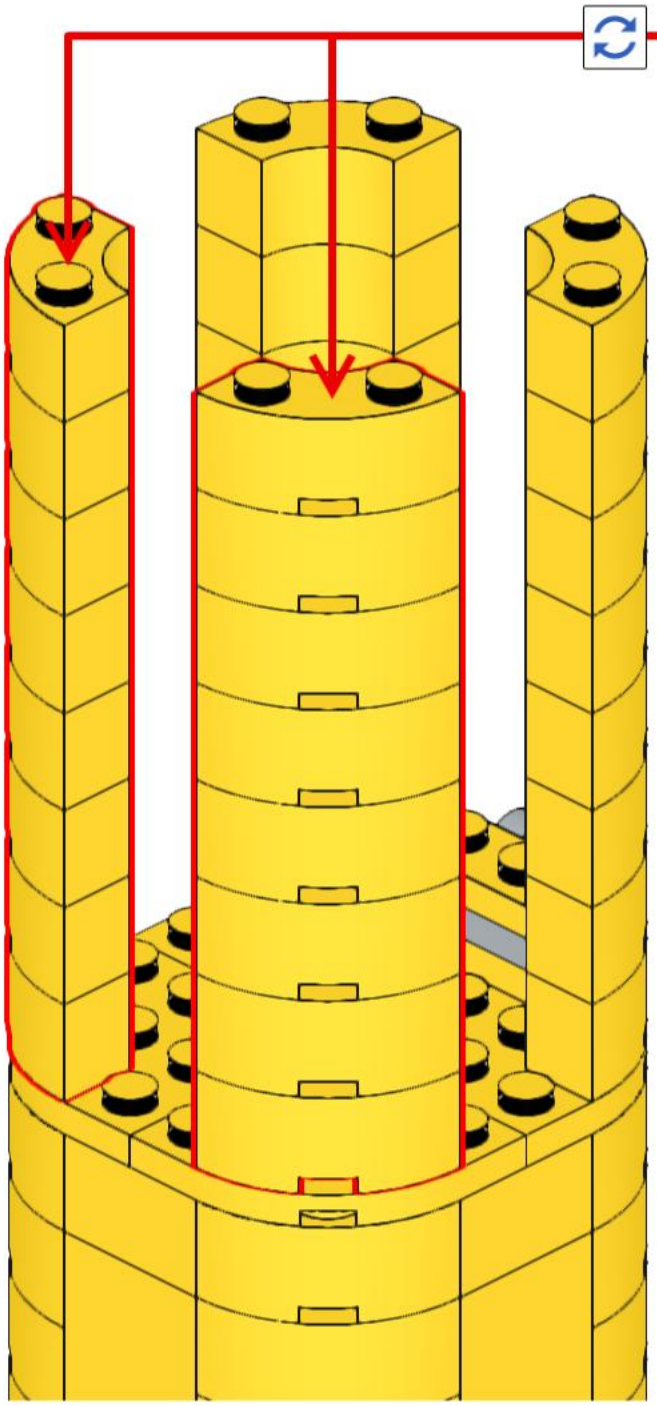

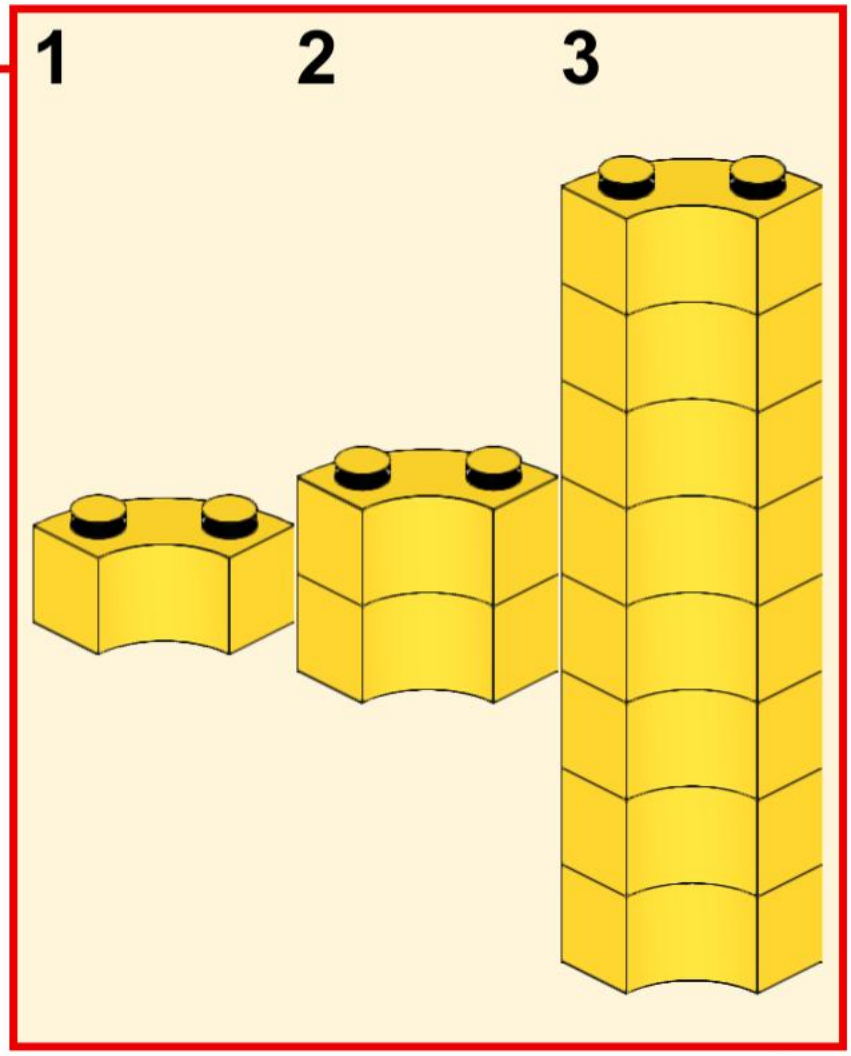

2x

16x

35

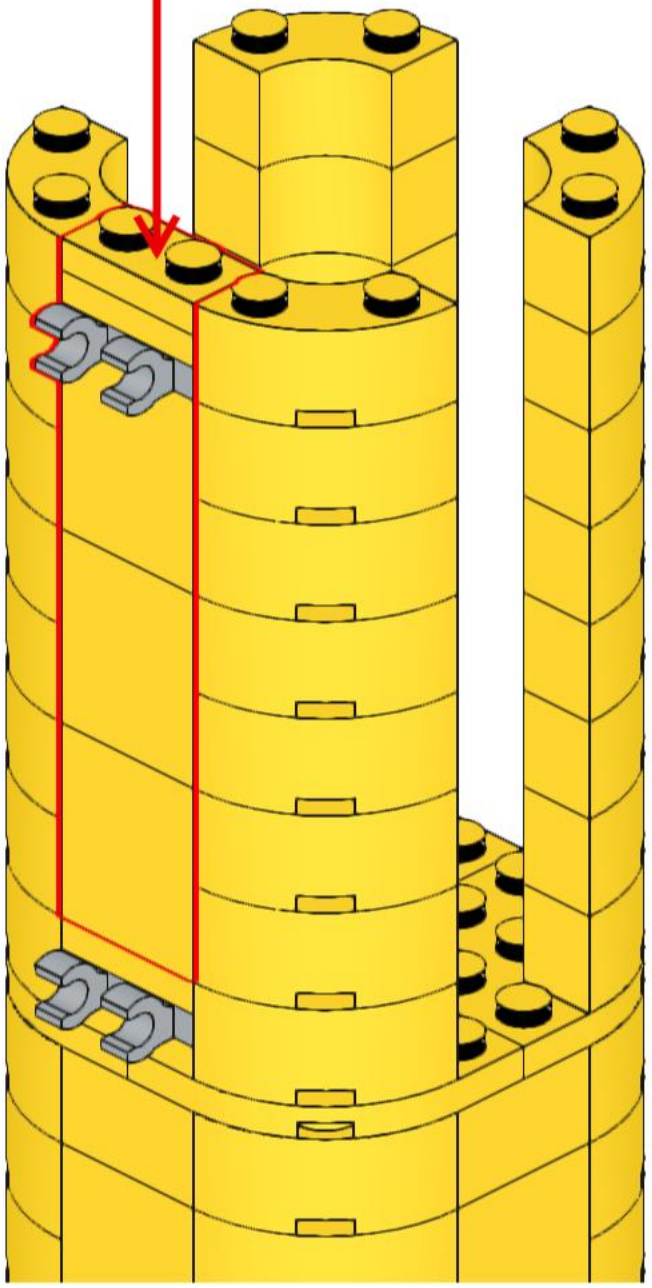

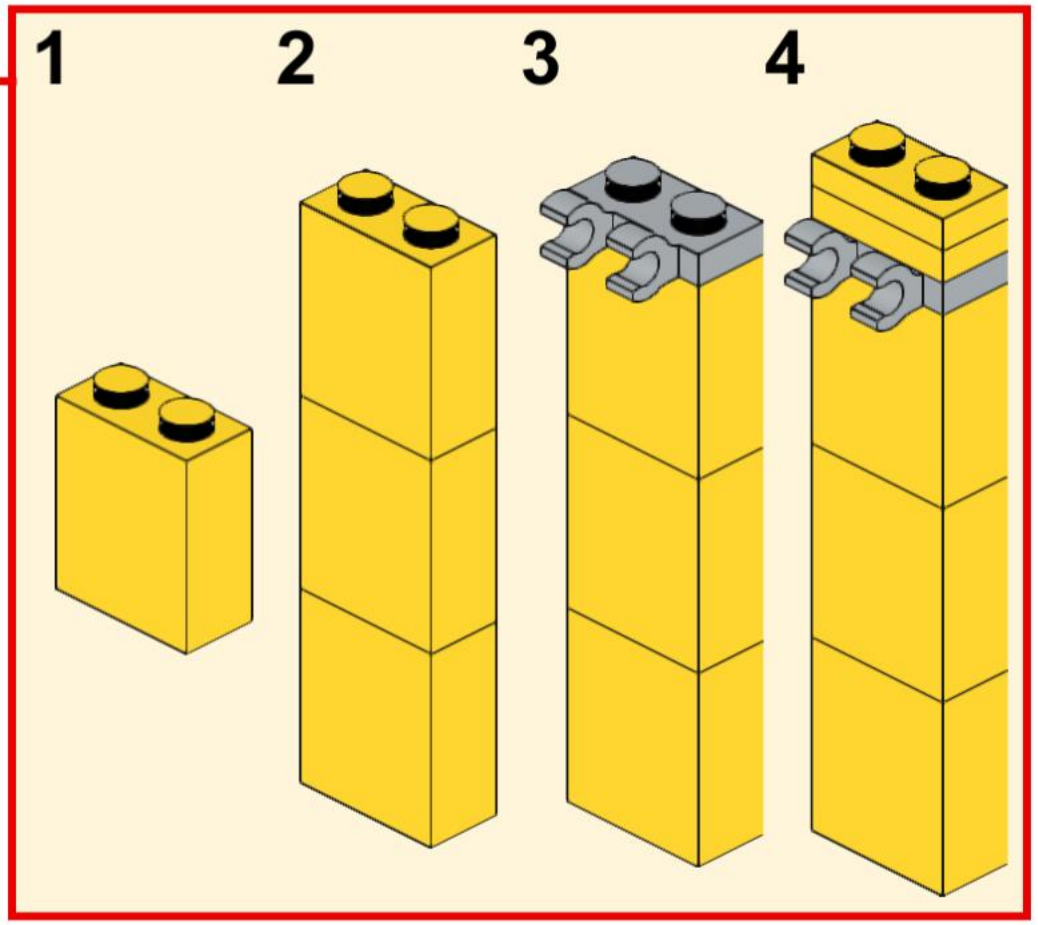

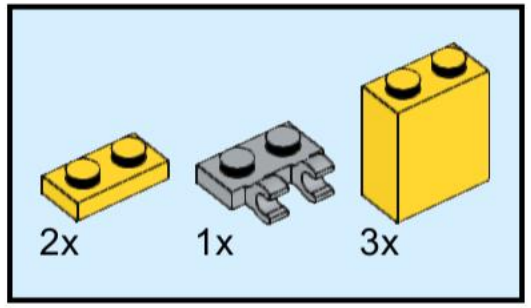

36

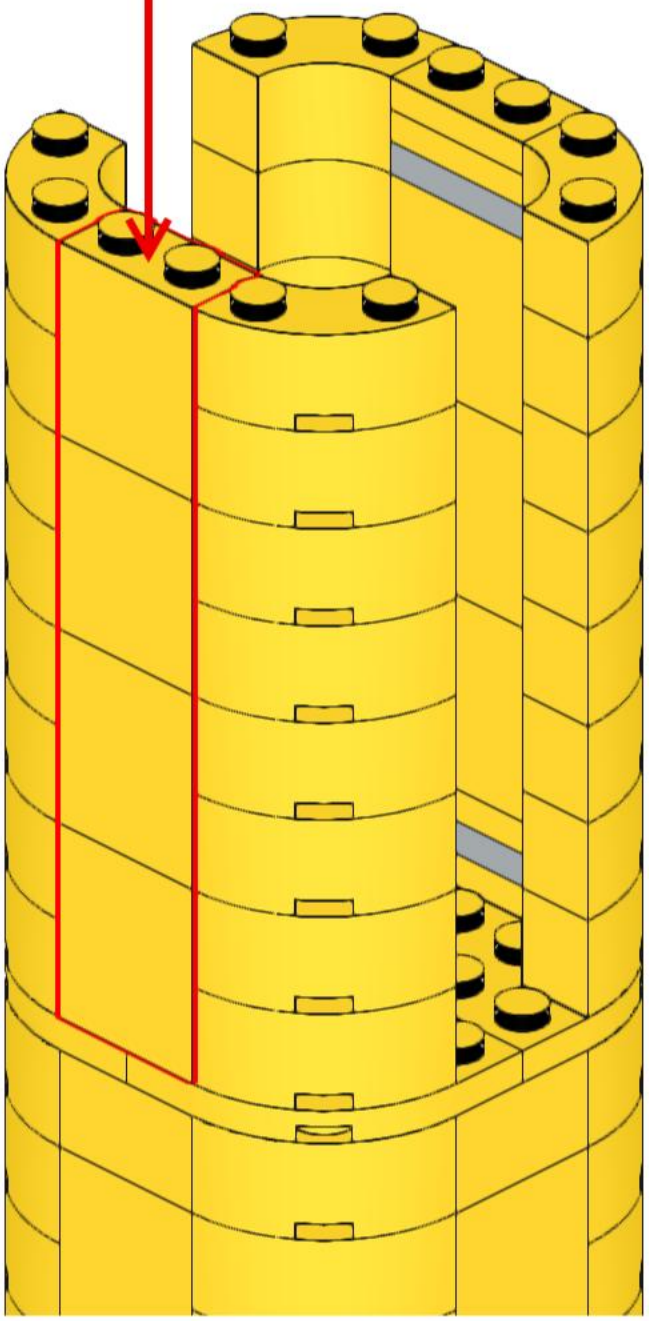

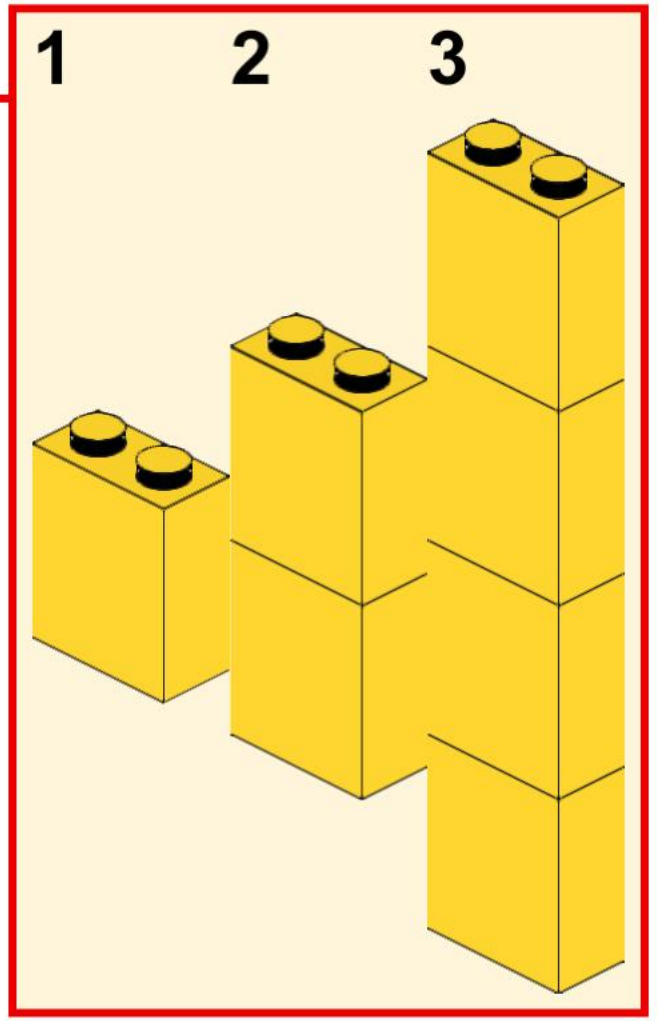

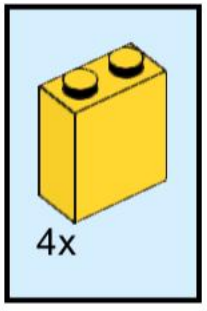

37

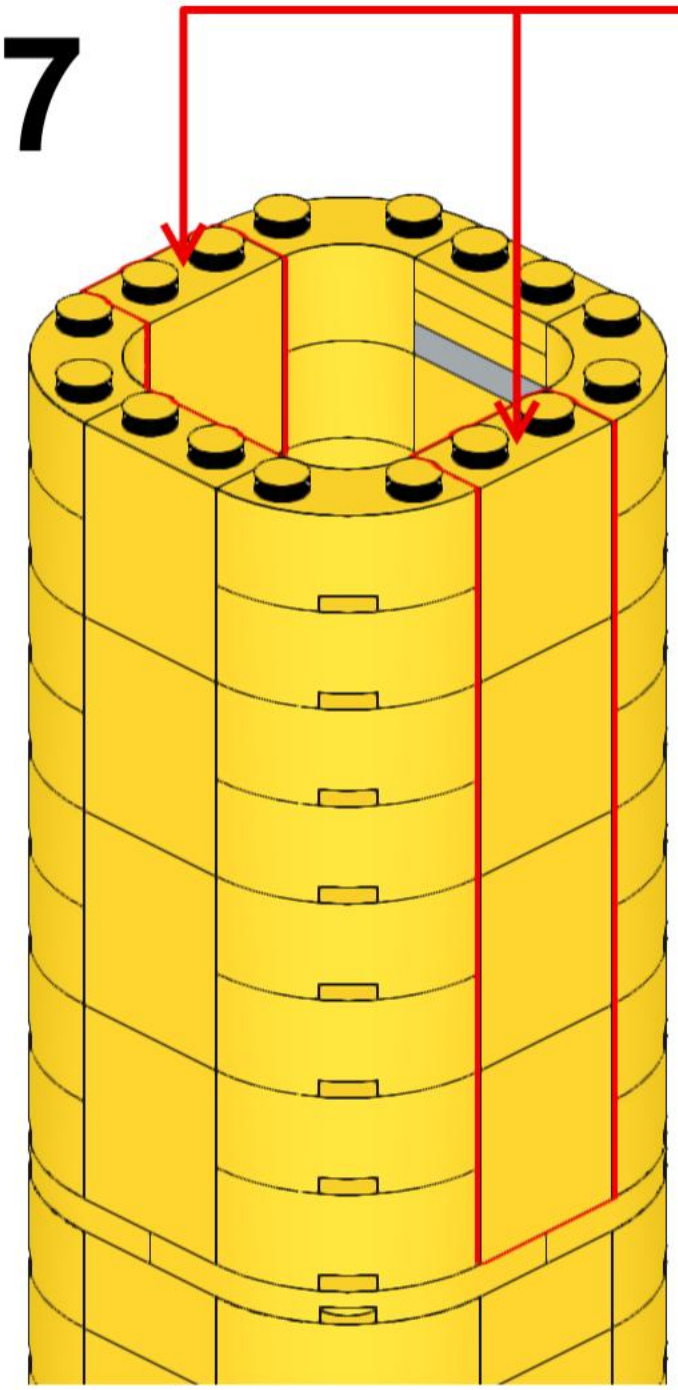

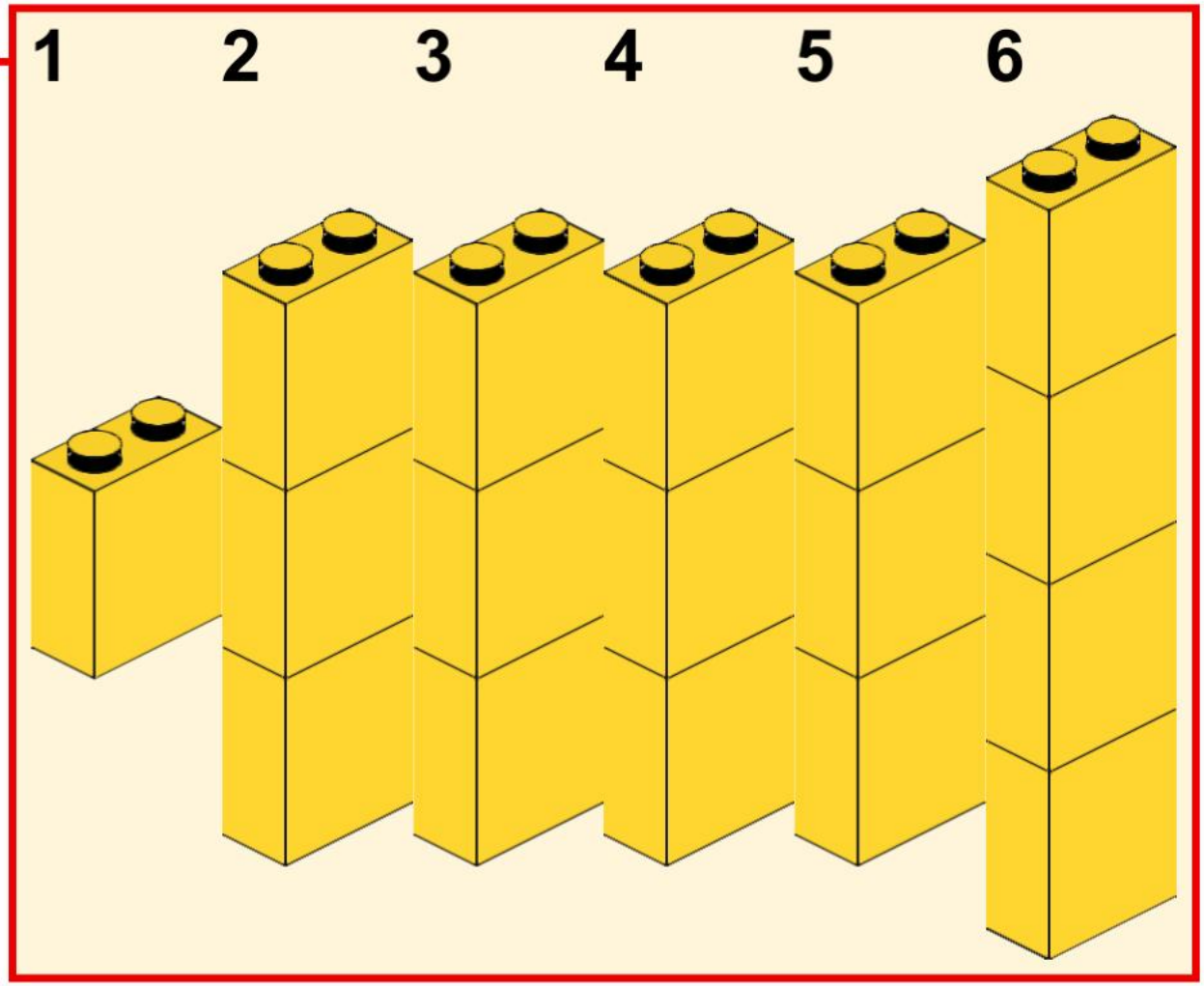

2x

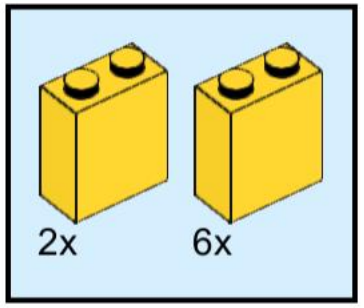

38

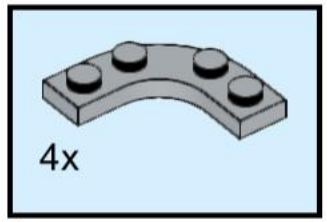

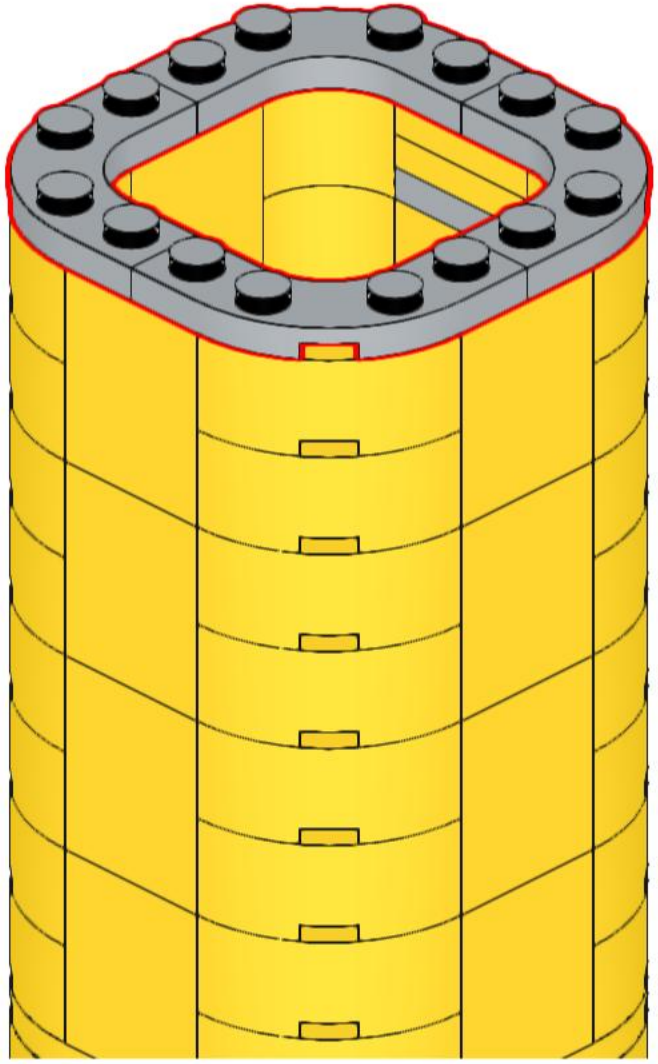

39

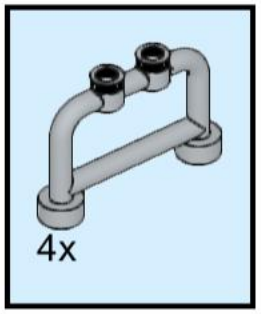

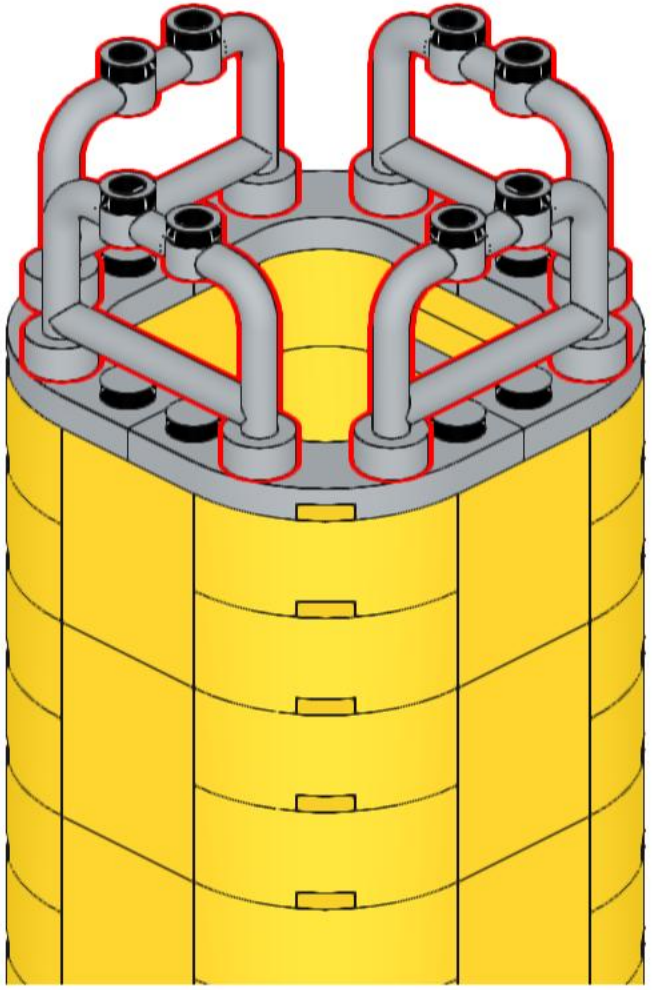

40

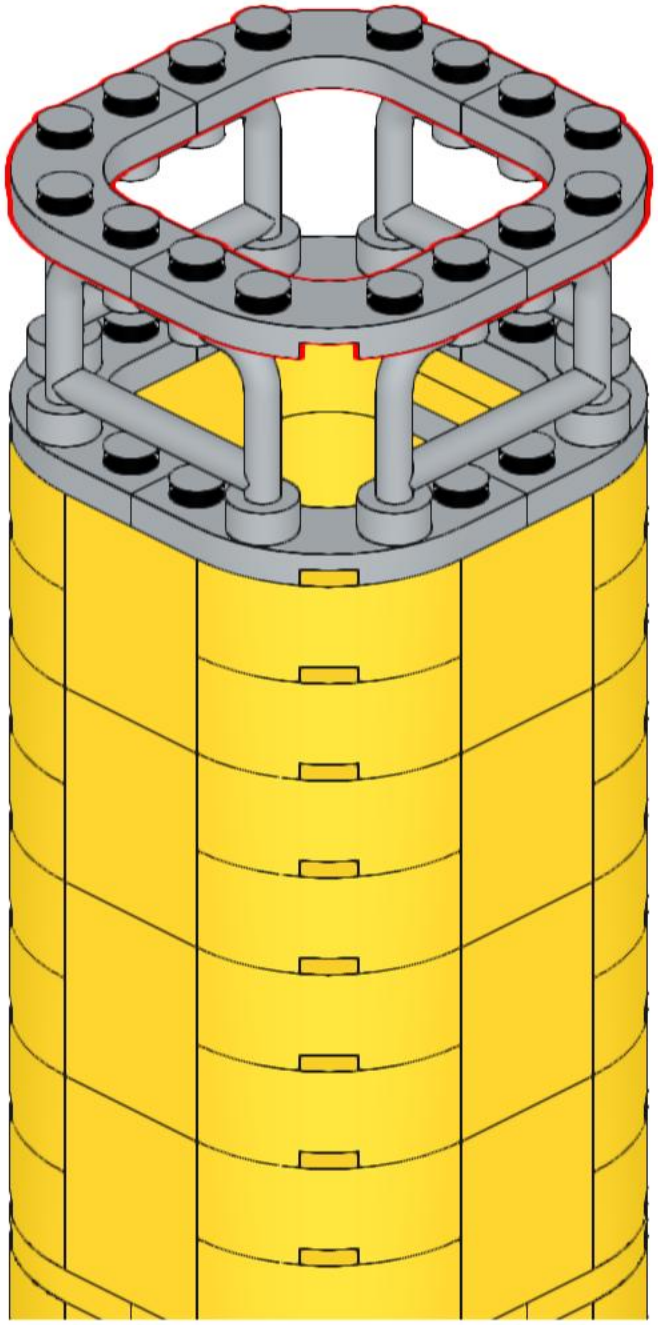

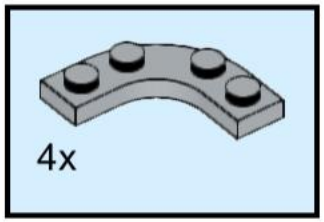

41

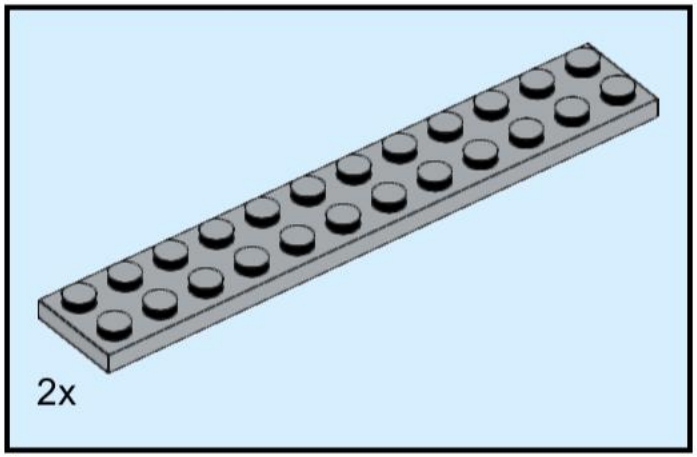

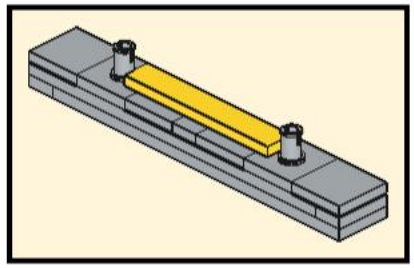

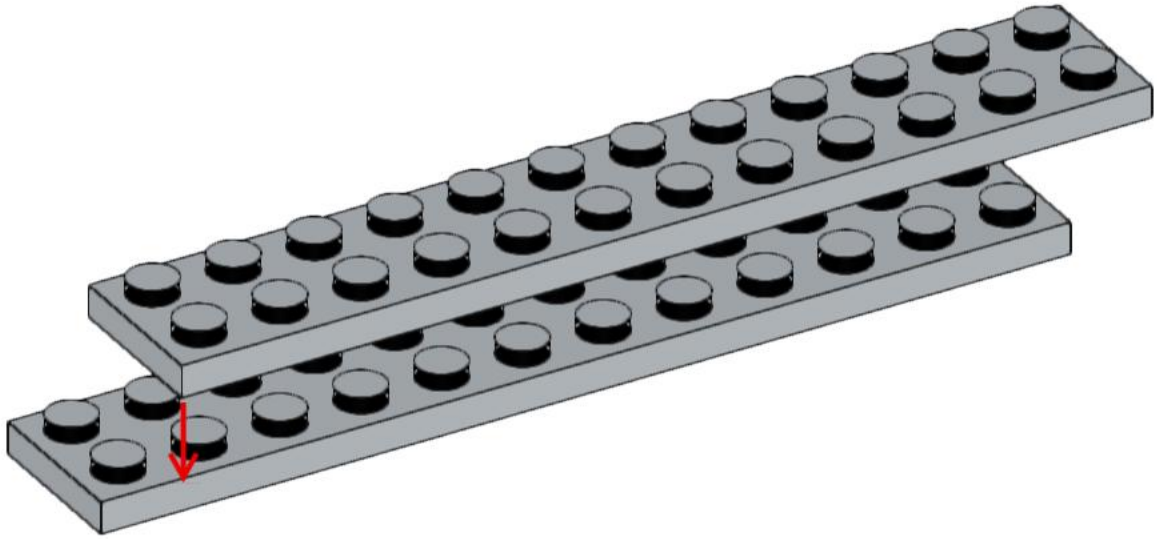

42

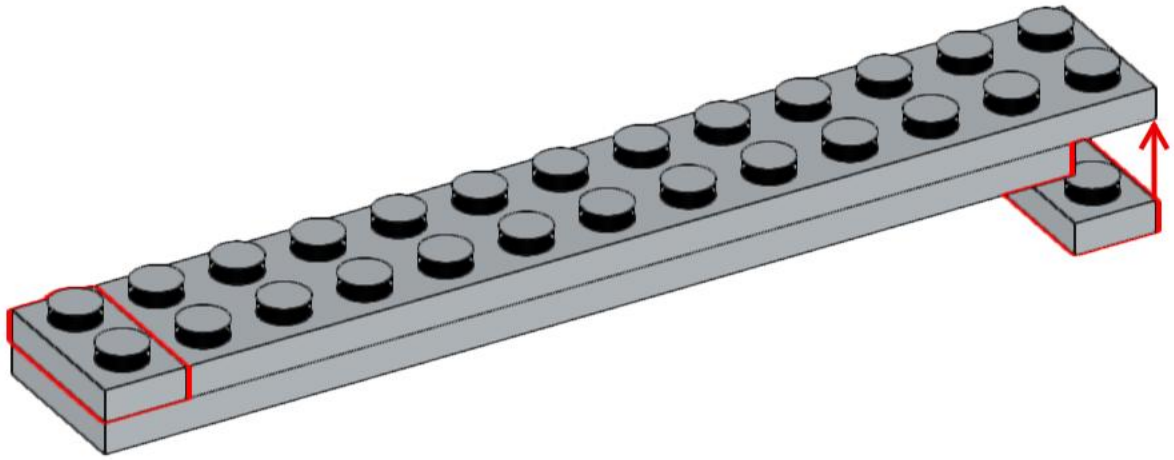

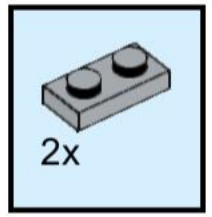

43

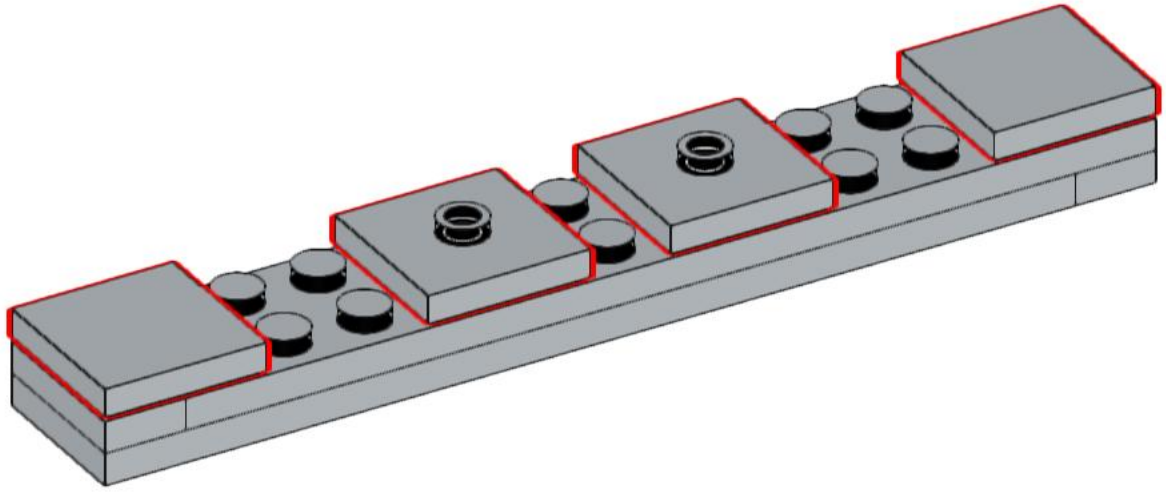

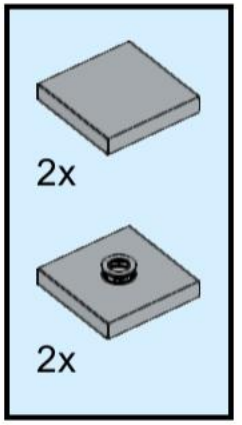

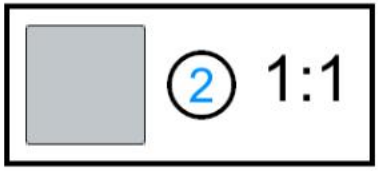

44

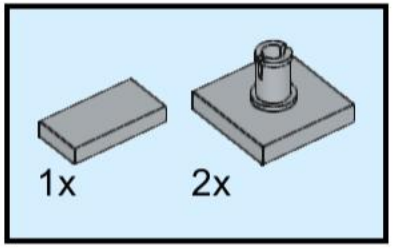

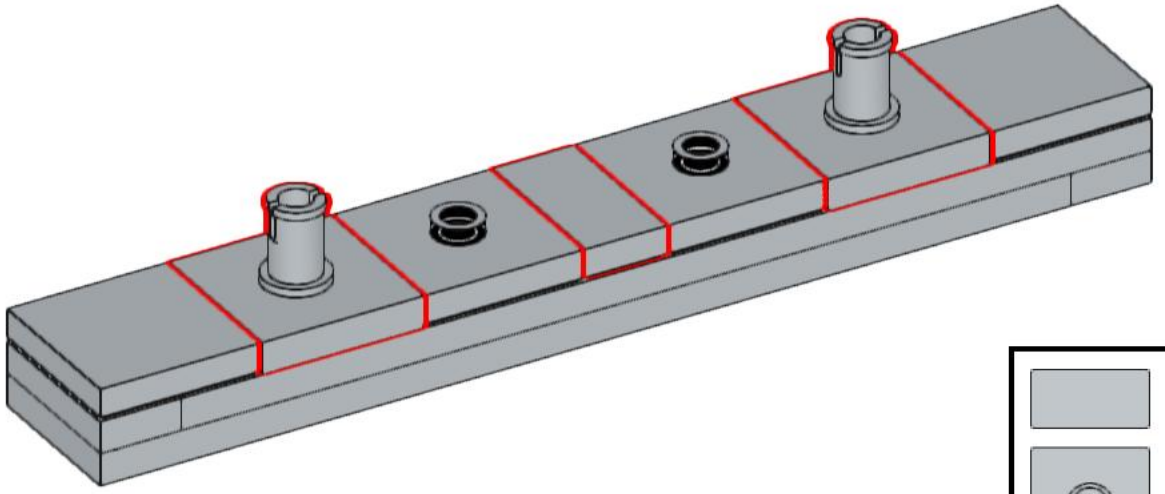

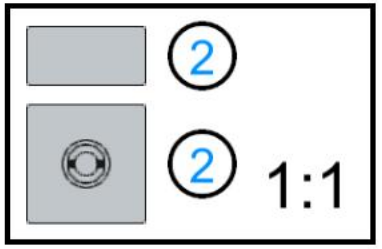

45

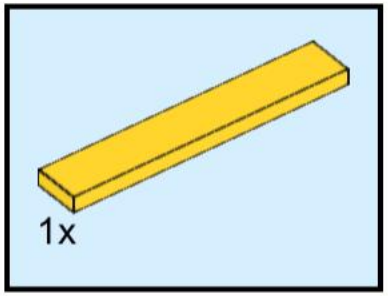

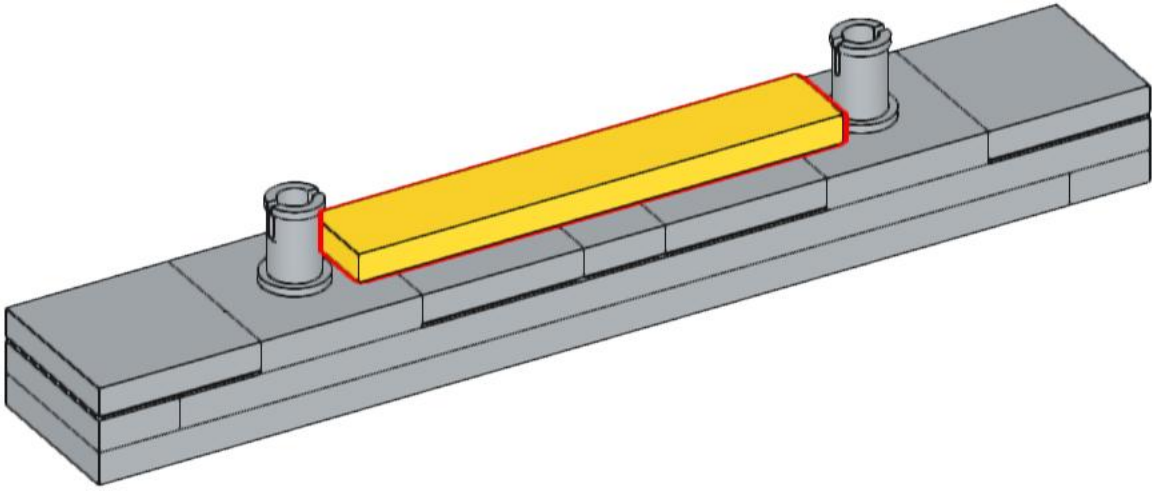

46

2x 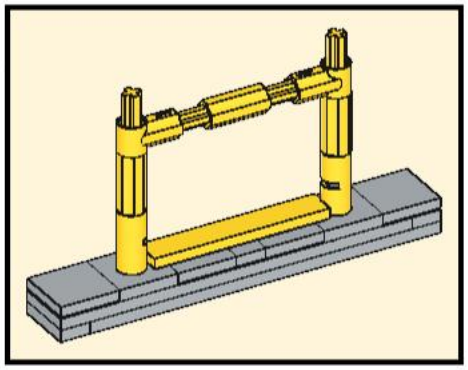

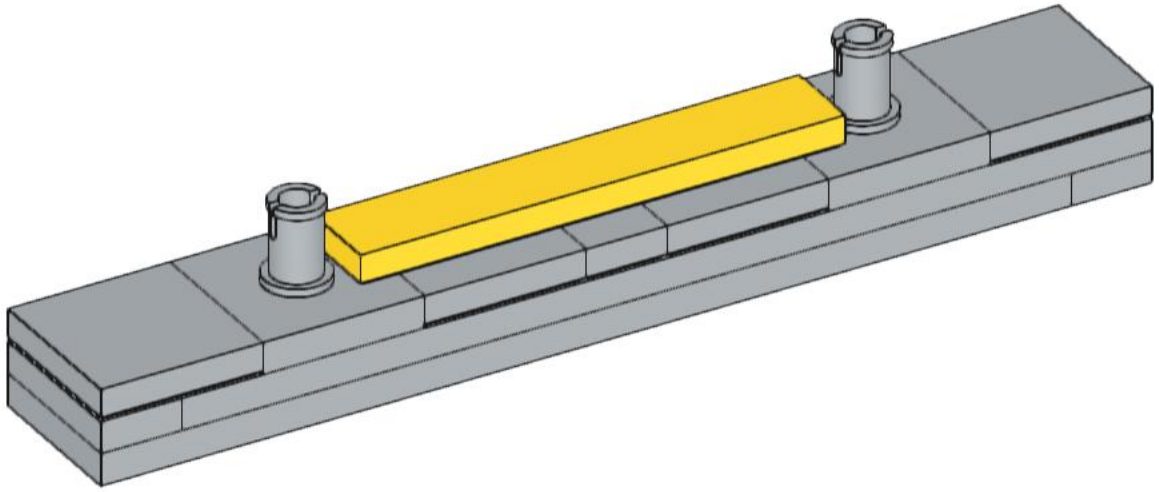

47

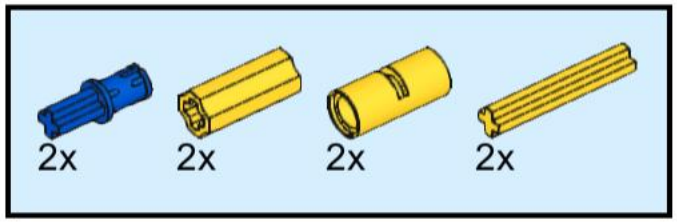

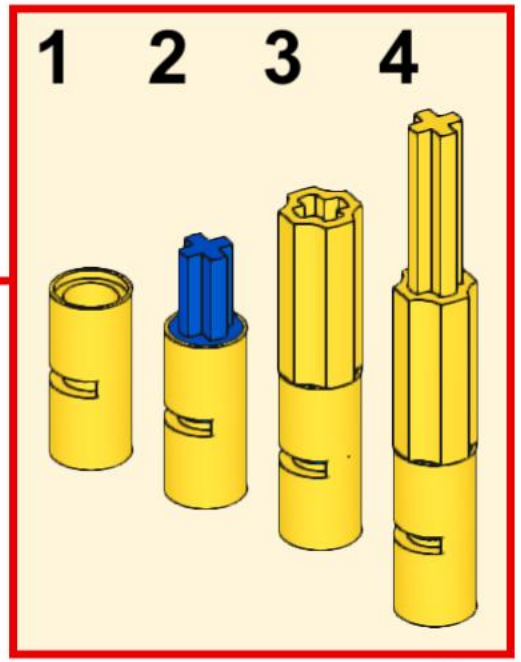

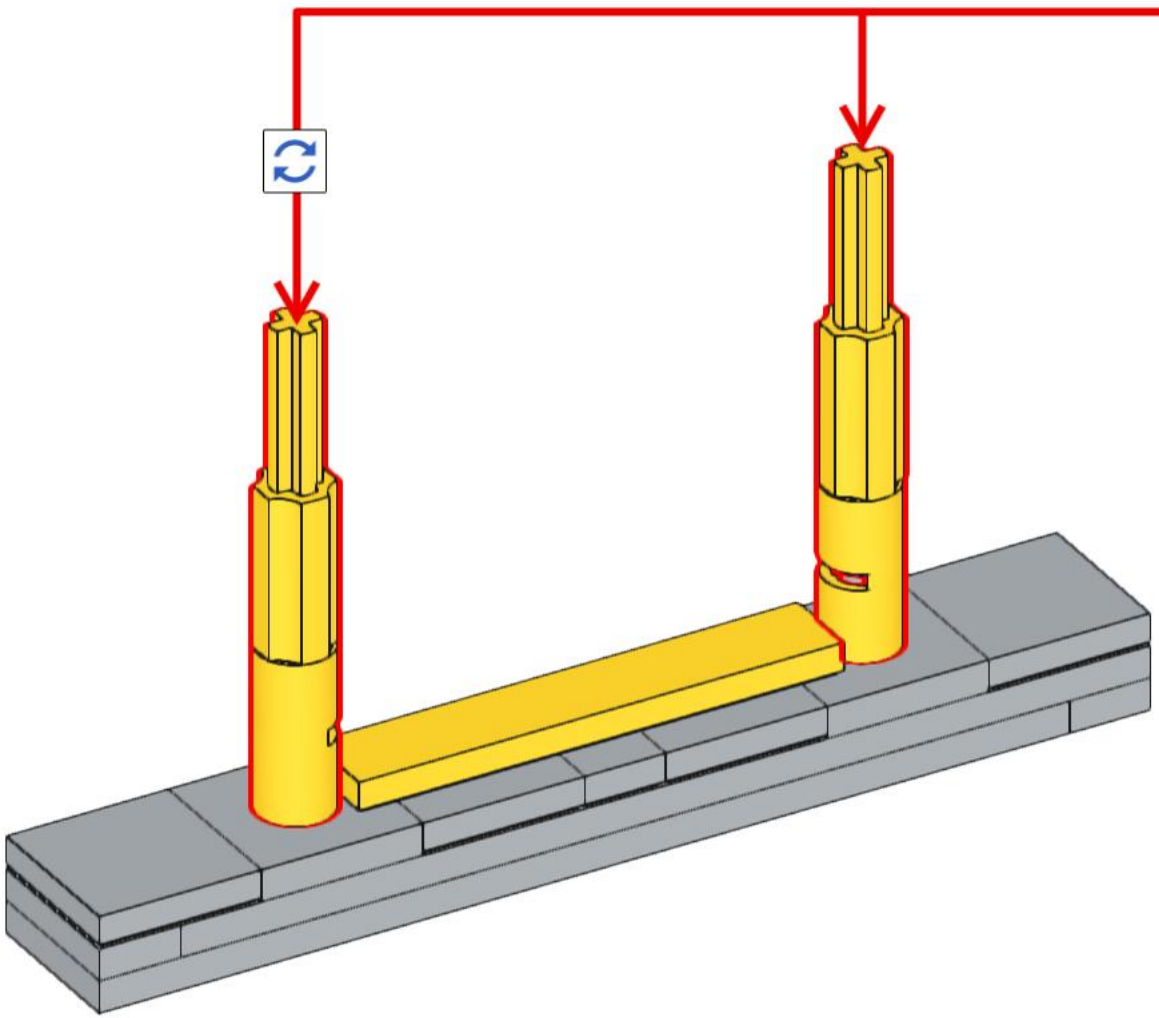

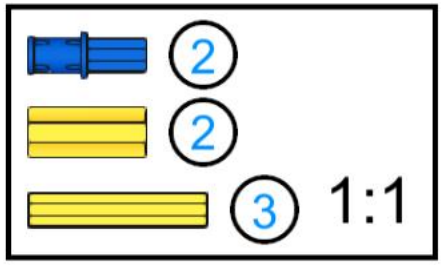

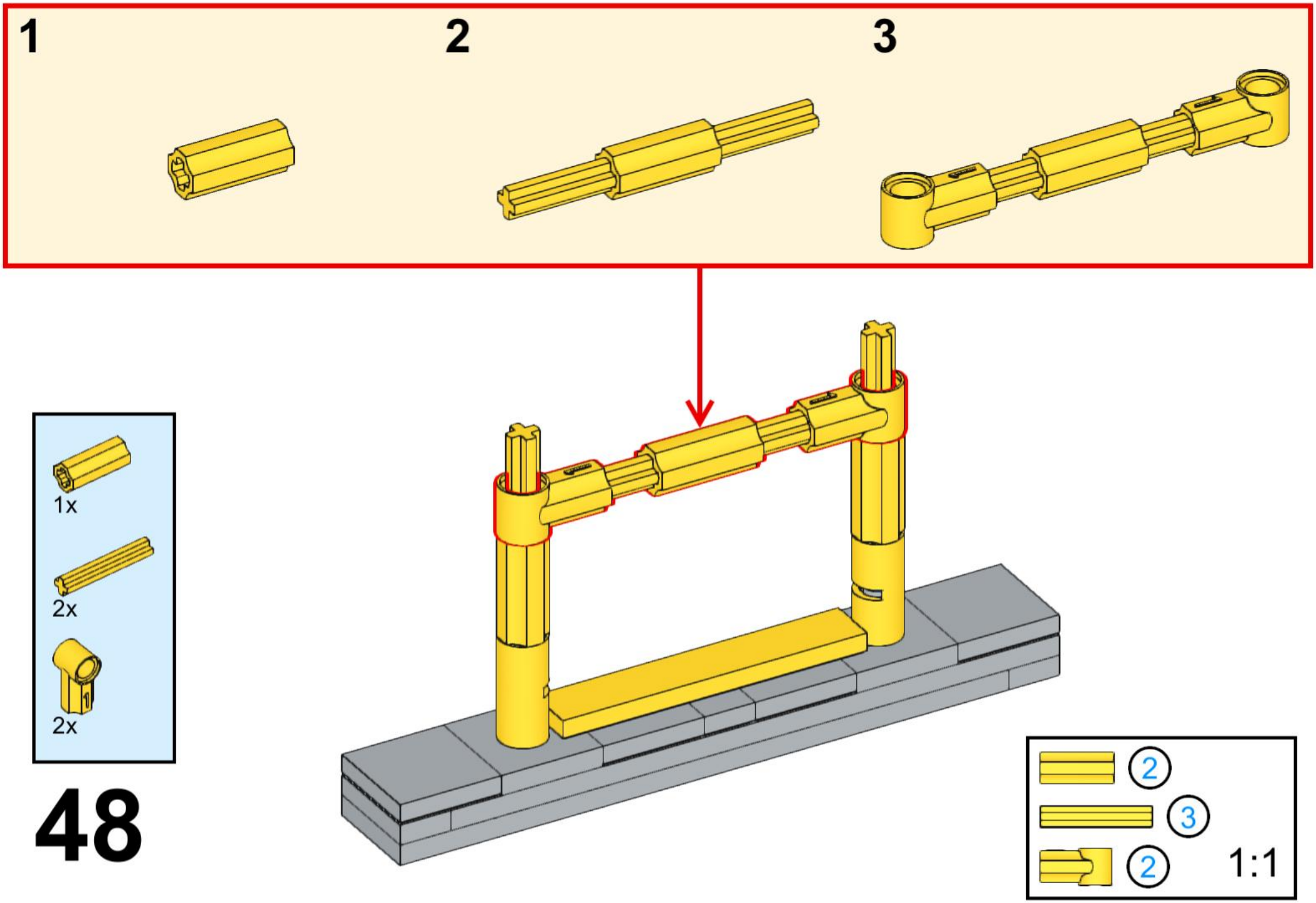

48

49

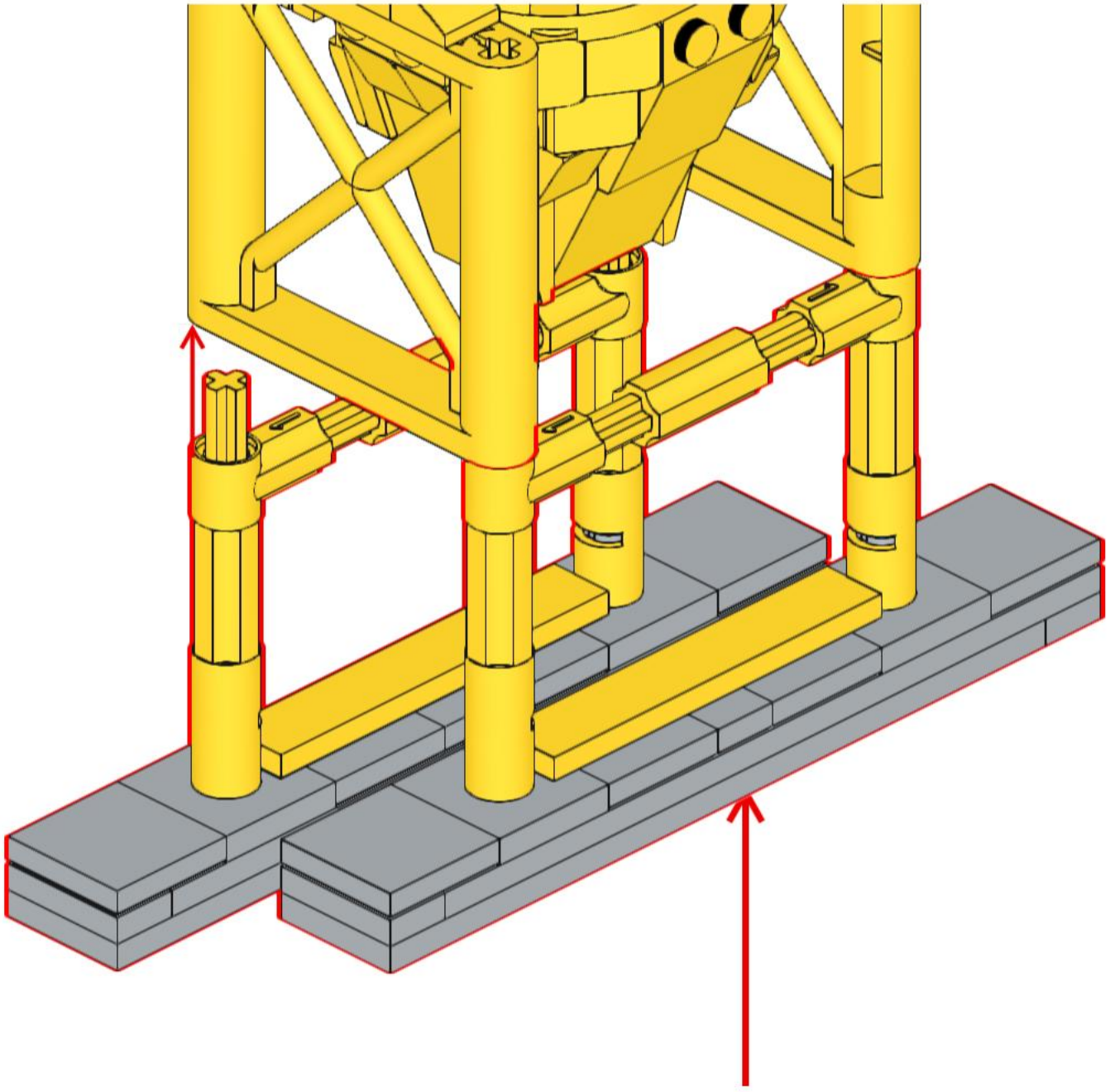

50

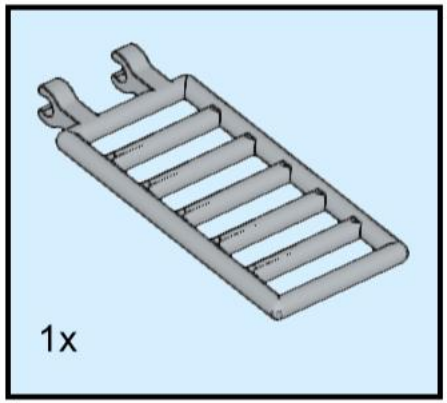

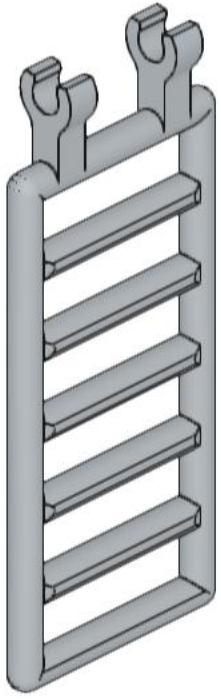

51

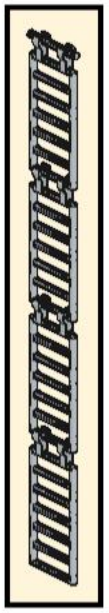

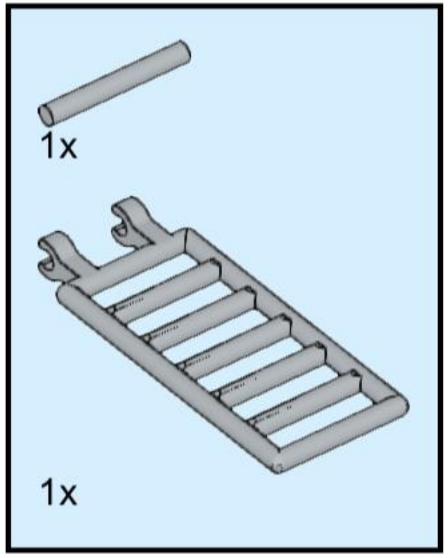

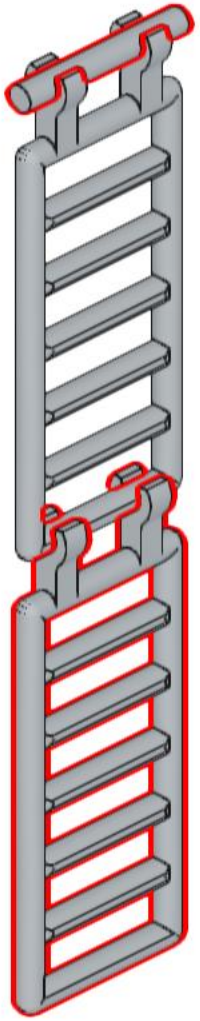

52

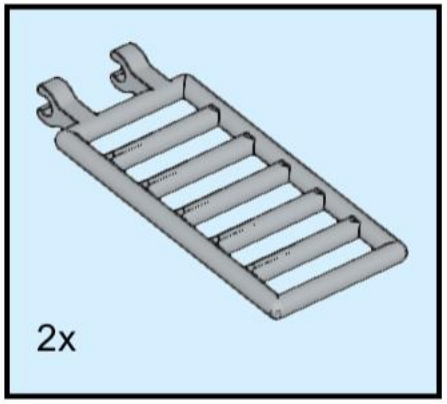

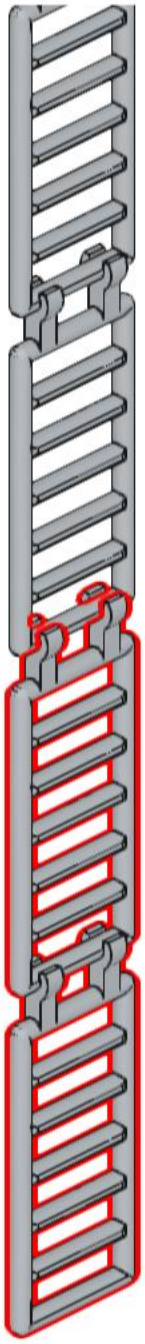

53

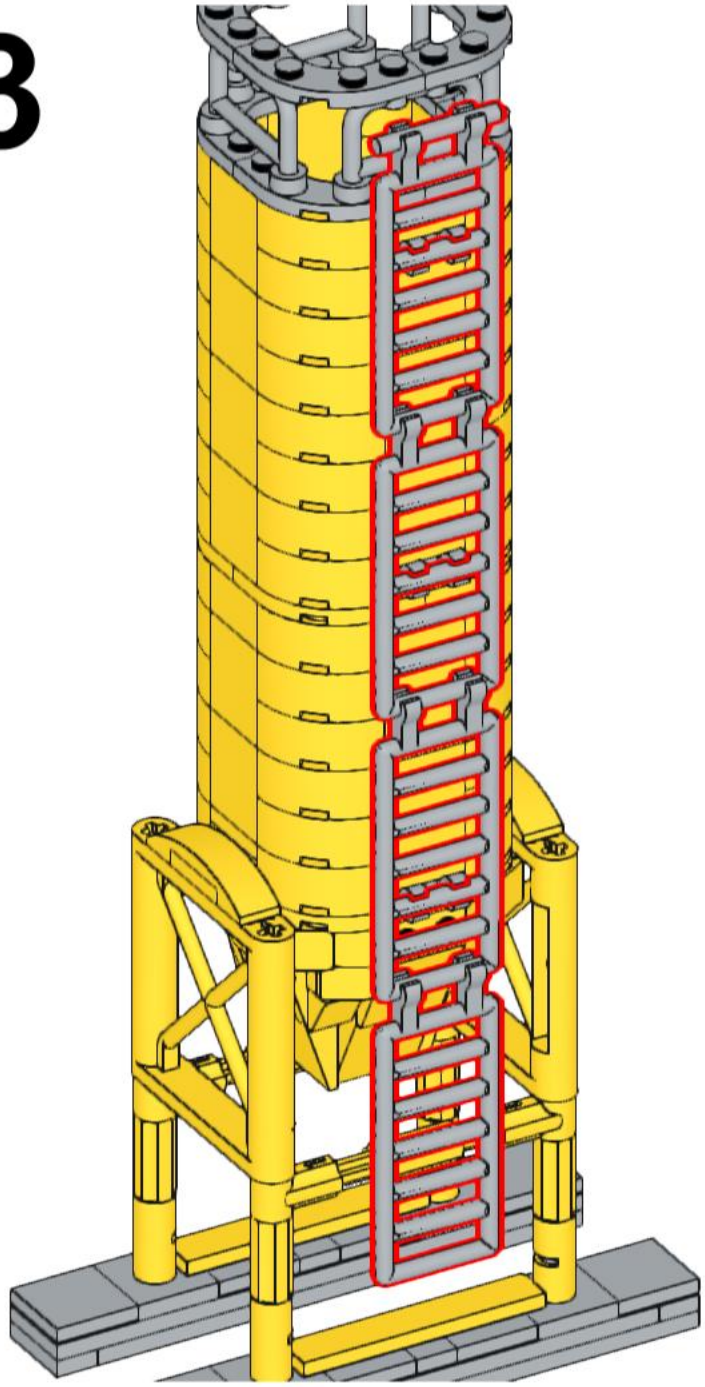

54

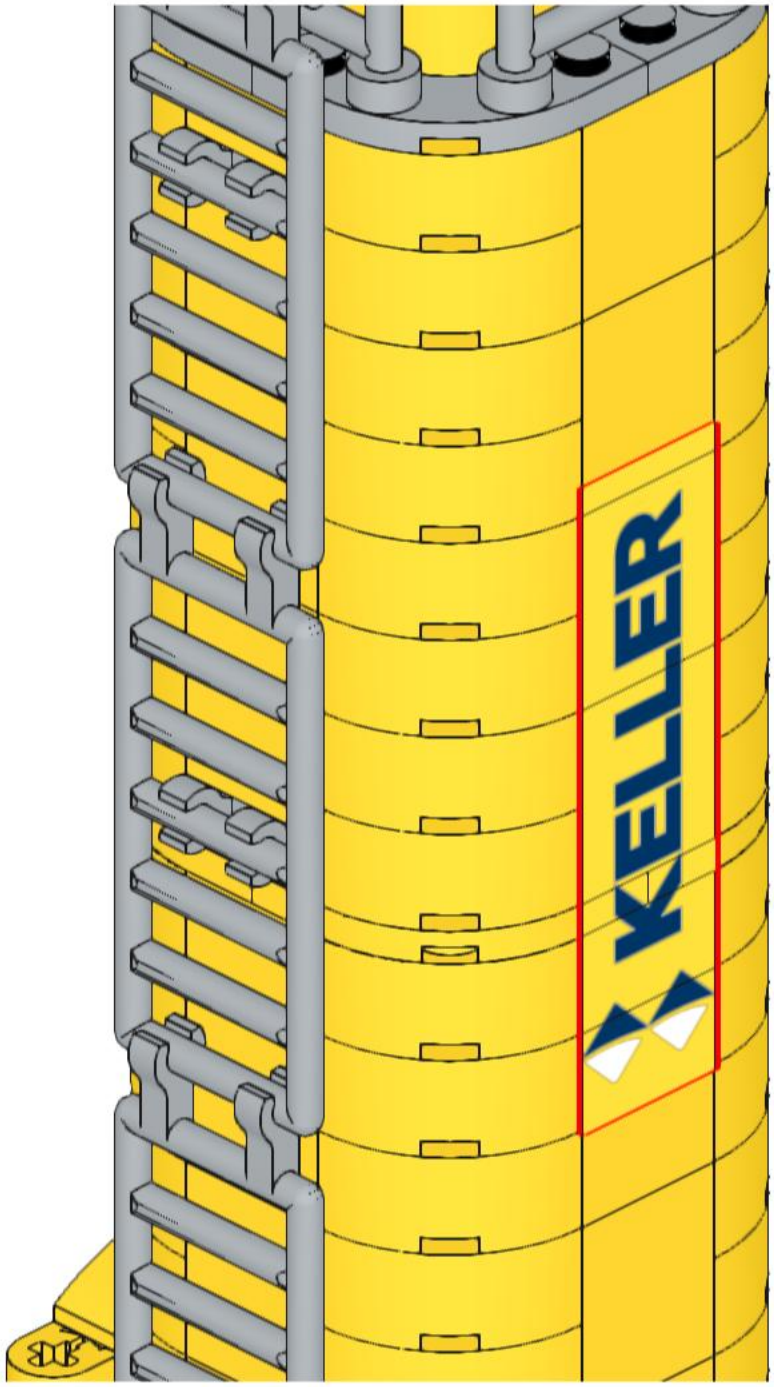

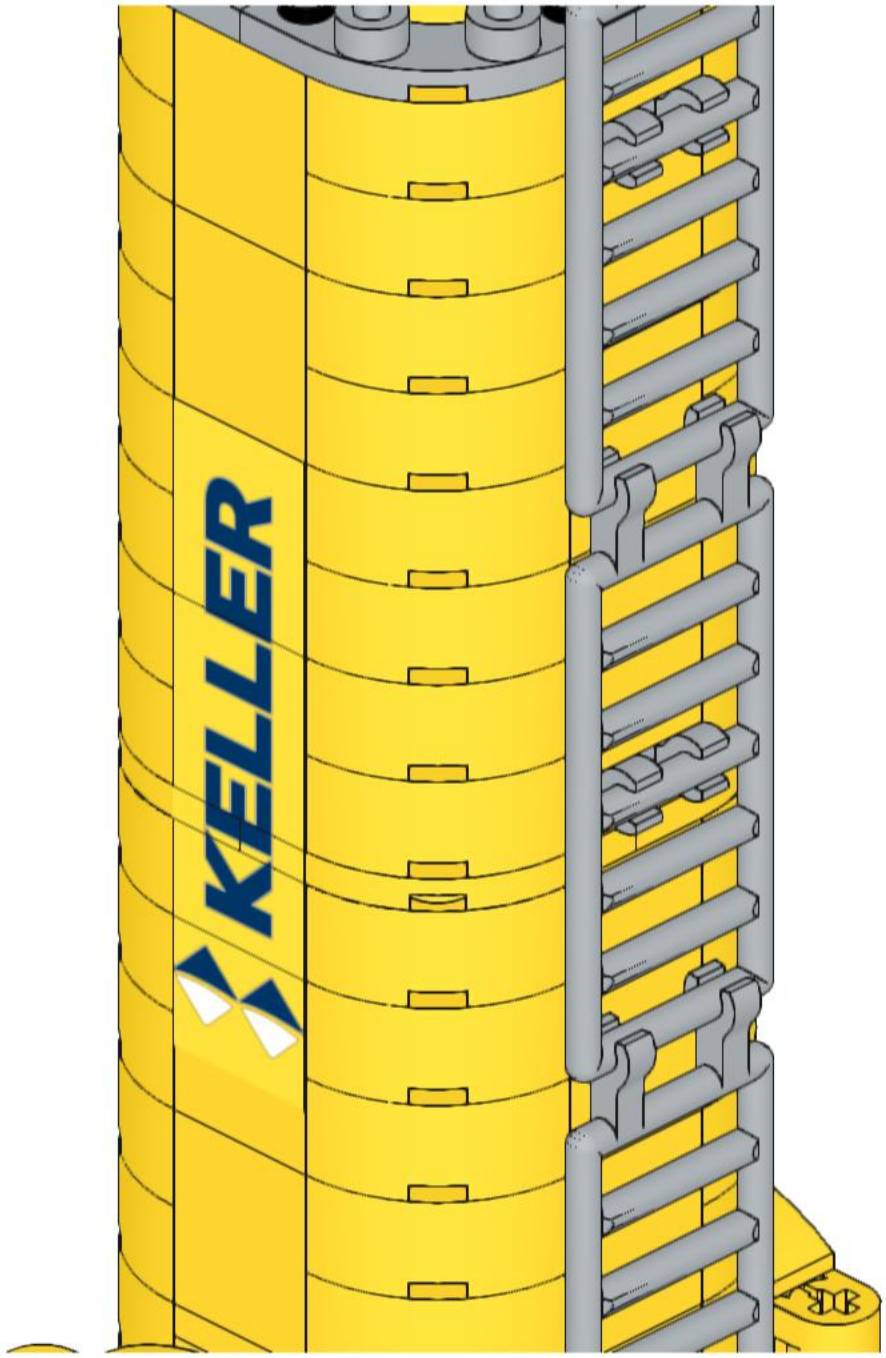
KELLER

2x
67329
Black

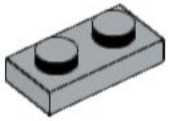

4x
3023
Light Bluish Gray

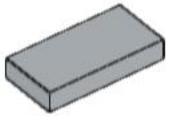

2x
3069
Light Bluish Gray

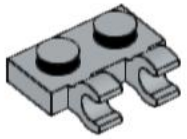

3x
60470b
Light Bluish Gray

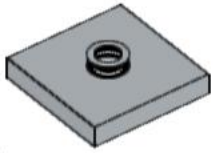

4x
87580
Light Bluish Gray

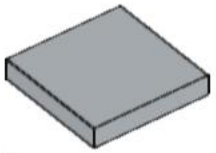

4x
3068
Light Bluish Gray

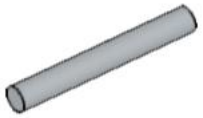

1x
87994
Light Bluish Gray

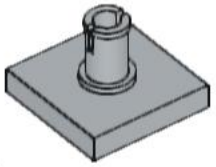

4x
2460
Light Bluish Gray

8x
68568
Light Bluish Gray

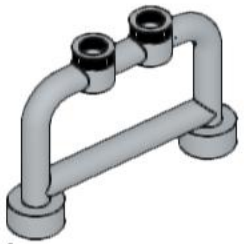

4x
4083
Light Bluish Gray

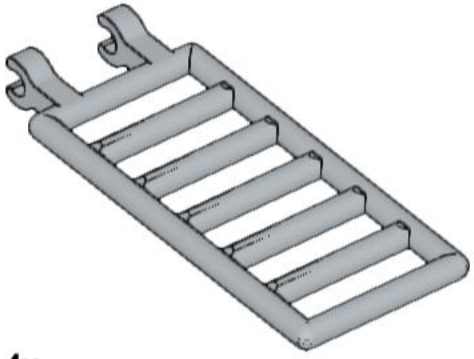

4x
5630
Light Bluish Gray

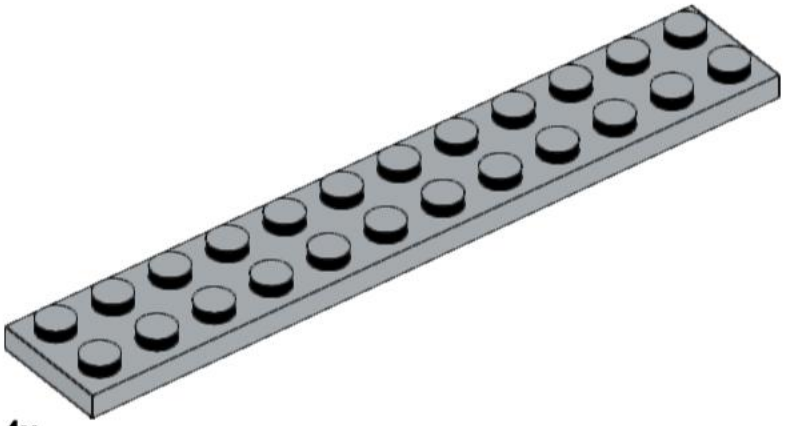

4x
2445
Light Bluish Gray

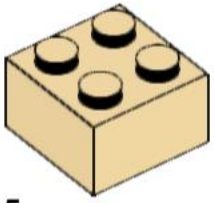

5x
3003
Tan

4x
3024
Yellow

20x
54200
Yellow

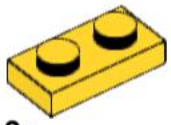

9x
3023
Yellow

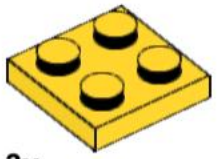

3x
3022
Yellow

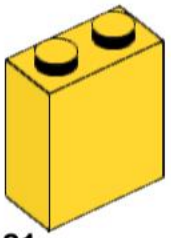

21x
3245c
Yellow

2x
43723
Yellow

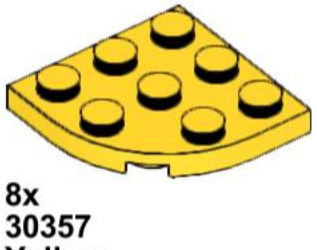

8x
30357
Yellow

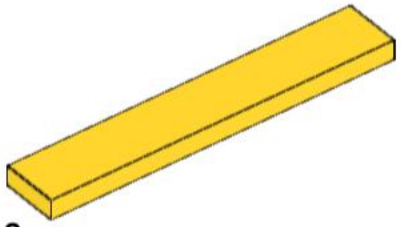

2x
6636
Yellow

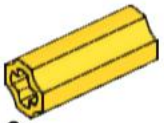

6x
6538c
Yellow

56x
85080
Yellow

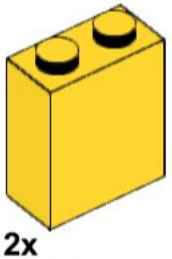

2x
3245b
Yellow

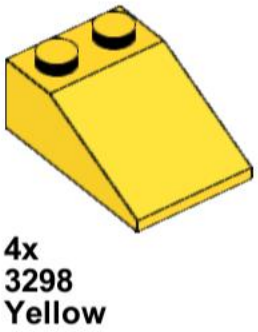

4x
3298
Yellow

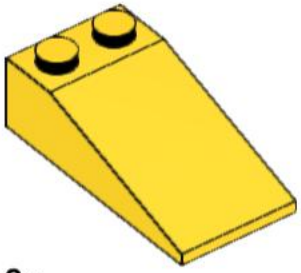

2x
30363
Yellow

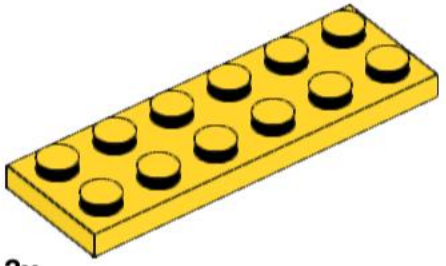

2x
3795
Yellow

4x
32013
Yellow

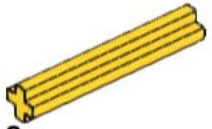

8x
4519
Yellow

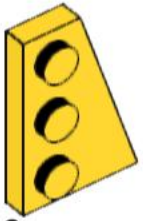

2x
43722
Yellow

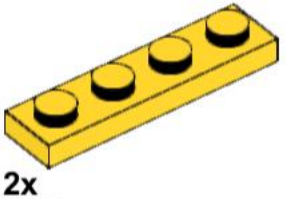

2x
3710
Yellow

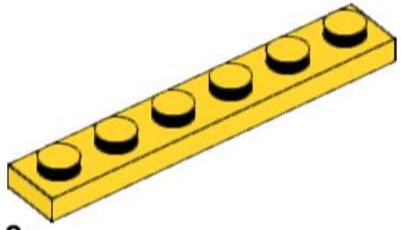

2x
3666
Yellow

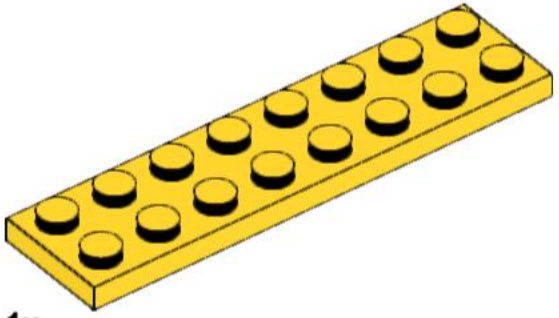

1x
3034
Yellow

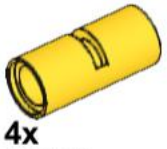

4x
62462
Yellow

2x
22885
Yellow

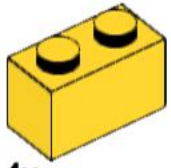

4x
3004
Yellow

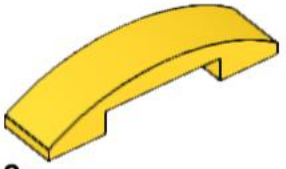

2x
93273
Yellow

2x

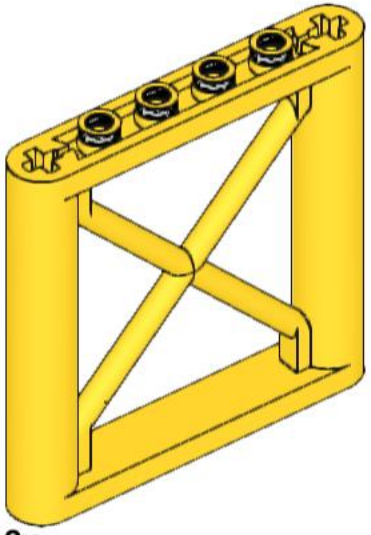

2x
64448
Yellow

4x
43093
Blue